NiceGate&Door

Systems for the automation of gates,
garage doors and barriers

Catalogue 2012

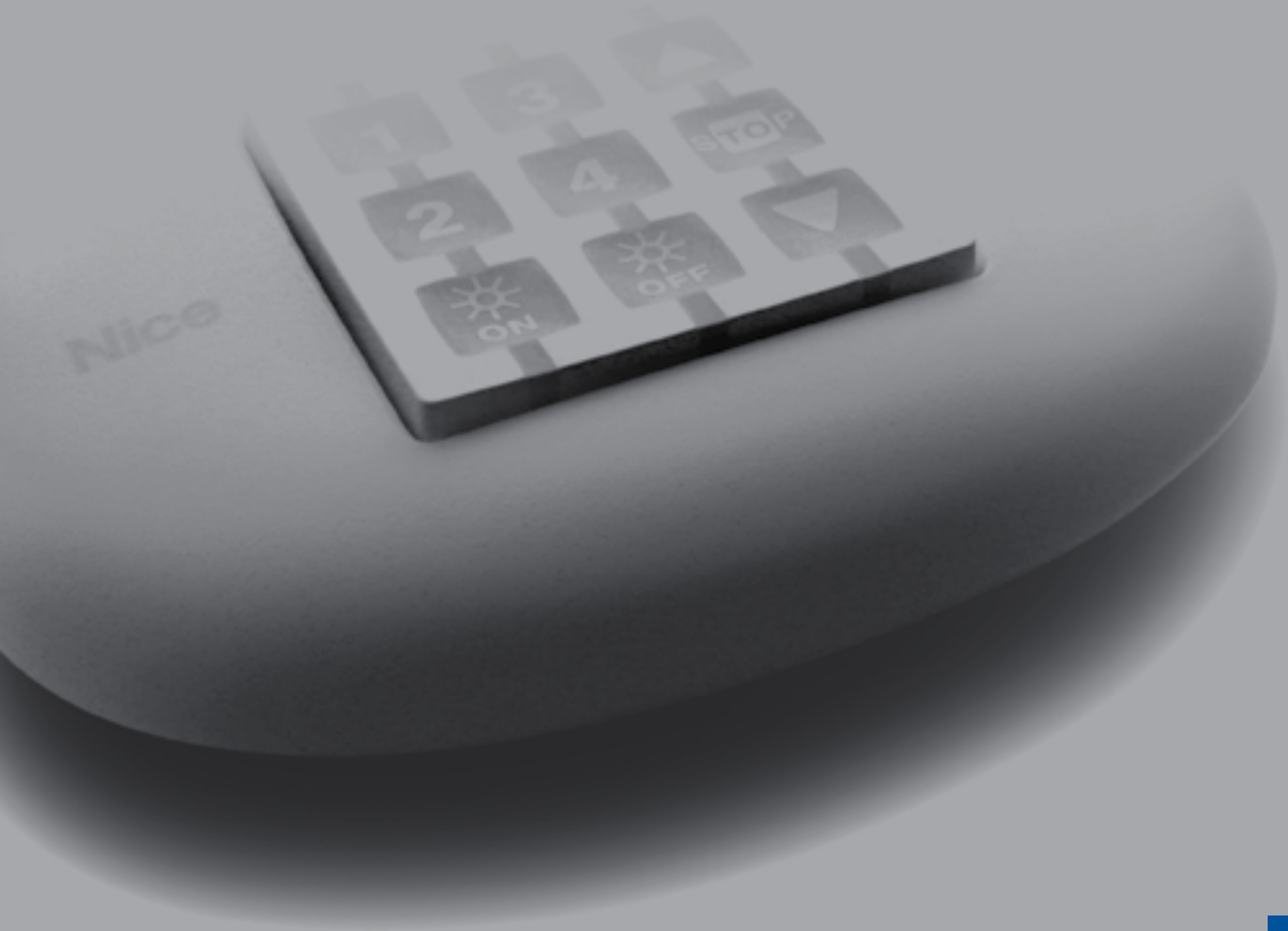

Nice

Home Automation

The Nice Idea

One of the leading international names in the Home Automation field, Nice offers a wide range of automation systems for gates, garage and industrial doors; parking and road barrier systems; blinds and shutters; wireless alarm systems and lighting systems.

Designing a Nice World

Improving the quality of life by simplifying everyday movements: Nice offers the security of going in and out in total freedom, by meeting the desire of comfort with practical products and an emotional design.
To make the most of the housing space.

NiceLoveEarth

Nice cares for the environment.
Using natural paper it avoids excessive use of raw materials and forest exploitation.
Waste is reduced, energy is saved and climate quality is improved.

Symbols

NEW — Product news

Solemyo — Compatible for operation with Solemyo system

Opera — Compatible for operation with Opera system

Blue BUS — With Nice BlueBUS technology 2 wires without polarity

24V — 24 Vdc power supply

230V — 230 Vac power supply

400V — 400 Vac power supply

NRC — Nice Radio Connection

To find the product you're looking for:

1. If you know the name of the product, you can quickly find it out in the index;

2. If you know the product code but not its name,
at page 226/229 you can find the list of the codes in alphabetical order;

3. If you do not know either the name or the product code,
look through the index to find the application you are interested in.
The first few pages of each section consist in a **simple guide:**
follow the arrows to single out the model which best answers your needs.

Surface mounted, with articulated arm, recommended for small posts, in kit

For leaves up to 1.8 m, 24 Vdc irreversible with built-in control unit equipped with BlueBUS technology, compatible for operation with Solemyo and Opera. Mechanical limit switch on closing.
WalkyKit
pages 36/39

- for 1-leaf → **WALKY1024KCE**
- for 2-leaf → **WALKY2024KCE**

Kinds of package

A. Number of pieces per pack.
Products can be purchased either in the quantity indicated or multiples of it.

Code	Description	Pc./Pack
ON1	1 channel, 433.92 MHz, colour graphite	10

B. Number of packs per pallet.
(For the products in the mechanical range only) Ordering either this quantity or multiples of it will guarantee the very best ordering conditions and consequently the quickest, easiest dispatch.

Unlike the **pieces per pack** item, this is not the minimum quantity (excluding the kits).

Code	Description	Pack/pallet
TO4024	Irreversible, 24 Vdc, with magnetic encoder, mechanical stop on opening	20

A guide to reading this catalogue ∧

Catalogue 2012

4|11 The Nice World

12|65 Systems for swing gates

66|85 Systems for sliding gates

86|109 Barrier gate operator systems

110|137 Systems for garage and industrial doors

138|179 Control systems

180|205 Accessories

206|225 Control units

226|229 Product code alphabetical index

Nice

Nice Total Control

Home integrated solutions. Ease of use, aesthetic quality, safety.

Nice is easy to offer because it's easy to install and use, thanks to a range of products which links innovation to design:

1. technology for the installer
2. comfort for the user
3. simplicity for everyone.

With Nice, gates, garage doors, blinds and shutters are always under control, as well as lighting and alarm systems.

For alarm systems

For blinds
and rolling shutters

for venetian blinds

For industrial doors

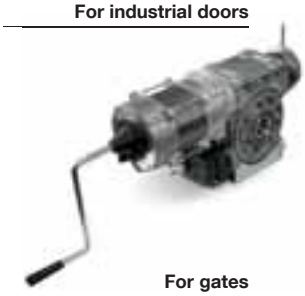

For gates

For garage doors

For road barrier systems

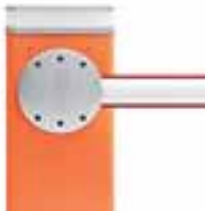

For parking systems

For lighting systems

Nice History

1993

The first transmitters: very Nice!
With Nice, transmitters become an object to show: functional and powerful, but miniaturized and elegant. The transmitter itself, shown in the car or attached to the key ring, becomes the Nice first way of communication which rouses an immediate request through the most powerful media: the word-of-mouth.

1995

Handy design: effortless and with just one hand.
In its first generation of motors Nice conceives unlocking mechanisms made of simple keys, easy to activate with just one hand. There will no longer be any waiting under the rain, physical effort or painstaking research for a key which cannot be found, while getting into the house with your hands full of shopping bags or while carrying a baby.

2003

BUS systems: much more simplicity.
Nice puts on the market the Nice BlueBUS system which changes the concept of automation by making installation really easy and quick: nothing but two wires now connect all system devices, which can be later amplified with the same simplicity.
The absence of polarity and the clamps identified by the serigraphies, make the connection even easier and really error-free.

2005

The modular control: choice and rationality.
Nice goes beyond the idea of finished products introducing the concept of modularity: a wide product range available without the problem of the warehouse management. Unique parts, composed in a different way, generate a wide range of "custom-made" solutions: it is the innovative technology of the NiceWay transmitters.

2000
"International Design Gallery" Expo 2000 Hannover

2001
Best of Category "Design for the Environment" XIX Compasso d'Oro

2002
Permanent Collection at The Museum of Design

1999, 2003, 2005
"Intel Design Award"

1999, 2003, 2005
"ADI Design Index"

2005
"Trophée d'Argent" Trophée du Design Batimat

2006
"Innovation Prize" R+T Stuttgart

2007
"Innovation & Design Award" LivinLuce

2008
"Grandesign Etico International Award"

2007

Opera marks the future of the automation.
Anticipating installer requests, Nice presents the innovative Opera system which makes the work for the installer even easier thanks to the remote control of any automation system via PC and PDA, while the end-user can manage home automations via mobile and Smartphone, PC and PDA.

2008

Solemyo: energy in nature!
With Nice, solar power now allows to “move” automations even far away from the electrical loads, avoiding the inconvenience of expensive masonry or unsightly wiring ducts for the control wires. It is the Nice wireless technology: an ecological and smart system, energy-saving.

2009

NiceHome System, security combines with automation.
Nice combines the simplicity and completeness of its control devices with the professionalism of the alarm systems the Group companies have developed according to their 30-year experience.
Apart from the alarm system, the user can directly manage up to 16 controls for automations, lighting and electrical loads. Everything with a 100% wireless solution: the maximum safety with the maximum ease.

2011

Nice + FontanaArte: light is movement.
Thanks to the acquisition of FontanaArte, Nice enters the lighting system complementary field with a wide range of integrated home solutions: a new angle and richness to its pursuit of elegance and excellence, to offer an innovative contribution to the needs of everyday life.

FontanaArte S.p.A.
Founded in 1932 by the architect Gio Ponti, FontanaArte is one of the Italian design firms which has “made history in lighting and furnishings” in Italy and around the world. Featuring a design culture which has founded its main concept upon the interplay between technology and beauty, FontanaArte has created a series of timeless objects of splendid shapes and forms, many of which have become design classics on exhibit in some of the world’s most important museums.

www.fontanaarte.com

Nice Life

Nice Headquarters

“Devised by Italian minds, unprovoking yet unmistakable in design, with a sense of movement which transmits and knows how to match technological contents in a playful way”

Lauro Buoro
Chairman of Nice S.p.A.

Project by Studio Carlo Dal Bo.

A Nice Place.
A new building, large and functional, to meet the needs of an ever-growing firm, reflecting its international focus and product personality: a training area and a showroom to interact with customers; an auditorium to foster institutional relationships with the world around.
At the core of its architecture, Nice has placed the person.

To “feel good” is a priority for Nice: for its staff the company offers gym, sauna, Turkish bath, bar.

Environmentally conscious art installations surround a pond, while the cultivations of the garden change with the seasons: this is the Nice gift to nature.

Come and discover the Nice world:
www.niceforyou.com

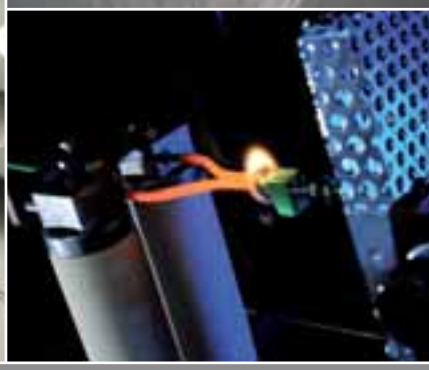

Nice Centre for Technology

Nice has made significant investments to guarantee even higher quality standards, which not only comply with directives and regulations, but also allow a continuous product improvement.

Through its advanced laboratories Nice carefully tests and controls its products every day in order to grant safety, quality, reliability and durability.

The Nice laboratories complies with ISO 9001 certification, known all over the world for the quality management, besides of being in accordance with EN 17025 standards which set the general requirements for testing labs.

All the Nice CE certified products comply with the relevant European Directives and the leading internationally recognized standards.

The Nice laboratories have been recognized by:
- LCIE (France)
- TÜV Rheinland (Germany)
- Nemko (Norway)
- Cetecom (Germany)
- FCC (USA)
- IC (Canada)
- Intertek (Sweden)

Nice Life

Be Extreme Be Nice

For freedom, for the contact with nature and the need for environmental awareness; for the team effort and the ability to handle the unpredictable,

Nice chooses to invest in the sport of sailing by participating in the forefront of the international Extreme 40 circuit.

… for a world without barriers…

Plasteroid

Golden Fleece

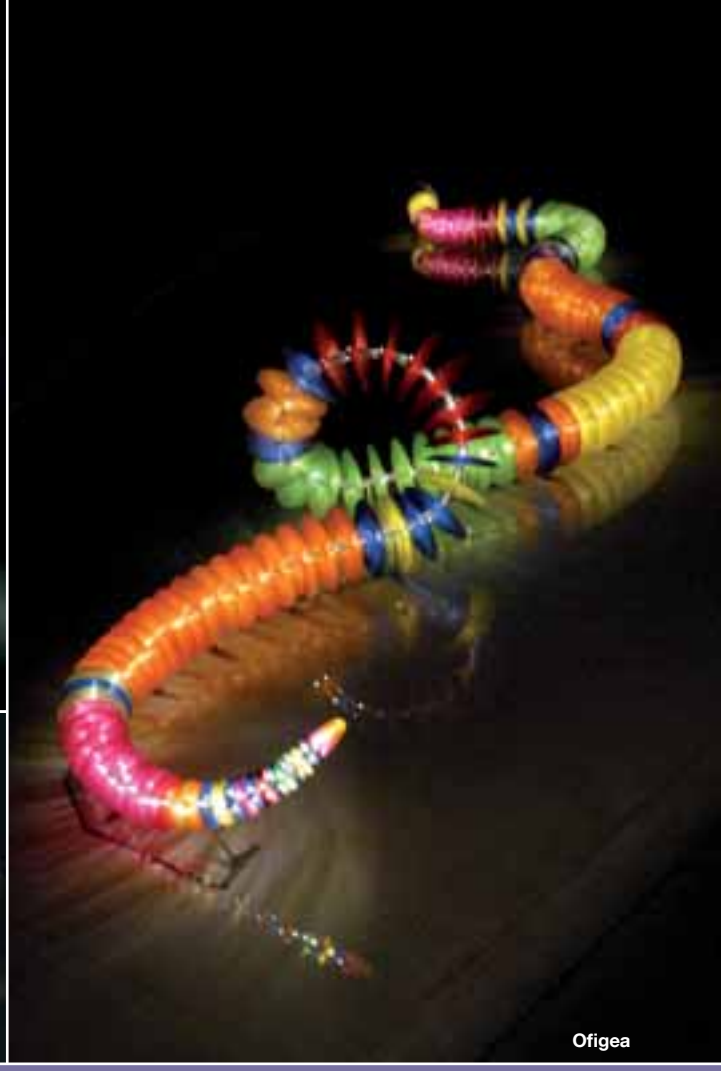

Ofigea

Nice Arts

In the frame of the increasingly need for renewal and changing values in sustainability, Nice contributes defining new scenarios through the promotion of eco-compatible design.

With the “Nice Arts” project in 2010 Nice is ranked among the top 265 in excellence representing Italy at Shanghai World Expo: “Better City, better life”.

Lighting sculptures by
Jacopo Foggini

Plasteroid
Interni Mutant Architecture & Design, 2011

Golden Fleece
Interni Think Tank, 2010

Ofigea
Interni Green Energy Design, 2008

Golden Fleece and Ofigea are now installed at the Nice Headquarters.

With the “F.e.e.l.” project (For Everyone Everywhere Liberty) Nice promotes activities, initiatives and products which give greater freedom in movement and more individual autonomy even to those who have special needs, such as the elderly and the disabled.

FOR EVERYONE
EVERYWHERE
LIBERTY

Systems for swing gates

4|11 The Nice World

12|65 Systems for swing gates

66|85 Systems for sliding gates

86|109 Barrier gate operator systems

110|137 Systems for garage and industrial doors

138|179 Control systems

180|205 Accessories

206|225 Control units

226|229 Product code alphabetical index

Surface mounted

20|21 Toona 4
22|23 Toona 5
24|25 Toona 7
26|27 ToonaKit
28|29 WingoKit
30|31 WingoKit 4024
32|33 Wingo5Kit
34|35 WingoKit 5024

Surface mounted, with articulated arm

36|37 WalkyKit 1024
38|39 WalkyKit 2024
40|41 Pop
42|43 PopKit
44|45 PopKit 7124
46|47 Hopp
48|49 HoppKit
50|51 Hyke
52|53 HykeKit
54|55 Hyppo 7000

Underground installation

56|57 X-Metro
58|59 X-MetroKit 2024
60|61 X-MetroKit 2124
62|63 Metroplex
64|65 Big-Metro

Nice Selection guide

Follow the arrow and choose the right product

Surface mounted, also available in kit

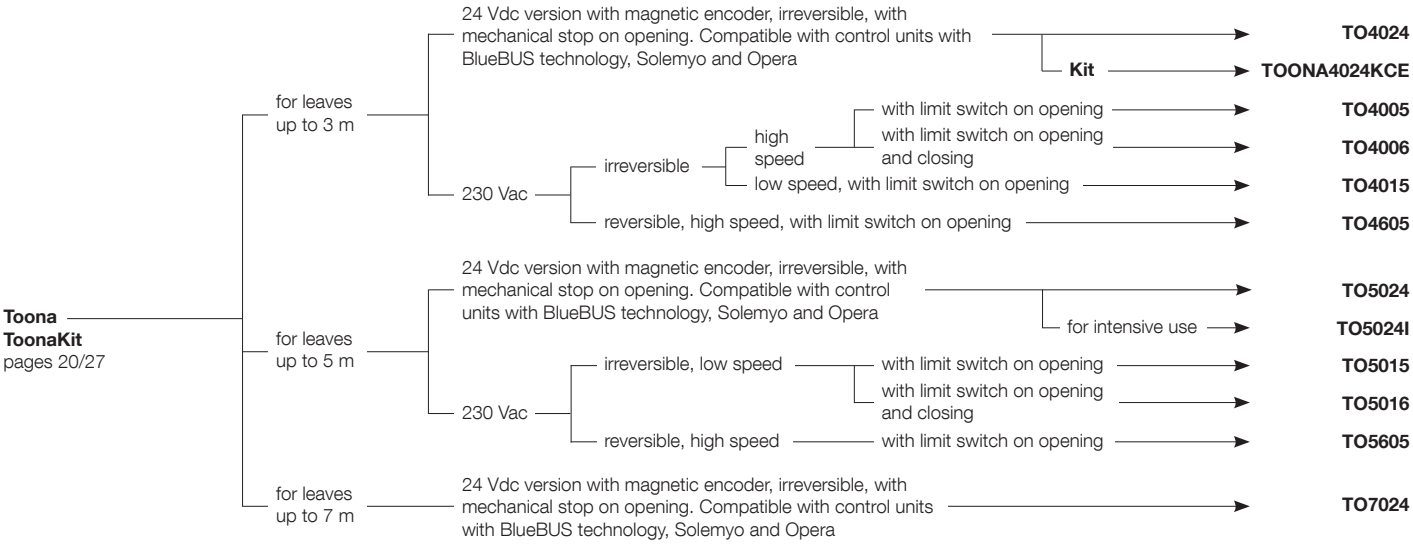

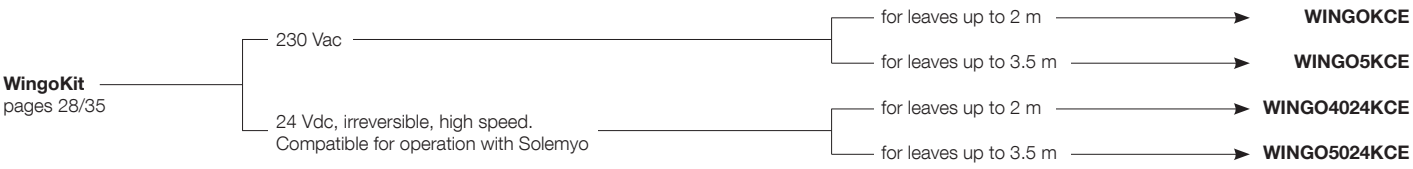

Surface mounted, with articulated arm, recommended for small posts, in kit

Toona
ToonaKit

WingoKit

WalkyKit

Nice Selection guide

Follow the arrow and choose the right product

Surface mounted, articulated arm, also for large size posts and lightweight structures, also available in kit

For leaves up to 2 m
24 Vdc, irreversible.
Control units compatible with Solemyo.
With limit switch on opening.
Pop
PopKit
pages 40/45

- with built-in control unit
  - → **PP7024**
  - with BlueBUS technology and Opera → **PP7124**
- without control unit → **PP7224**
- **Kit**
  - → **POPKCE**
  - with BlueBUS technology and Opera → **POP7124KCE**

For leaves up to 2.4 m,
24 Vdc, rreversible.
Control units compatible with Solemyo.
With limit switch on opening.
Hopp
HoppKit
pages 46/49

- integrated control unit, with BlueBUS technology, Solemyo and Opera → **HO7124**
- without control unit → **HO7224**
- **Kit** → **HOPPKCE**

Surface mounted, articulated arm, for large size posts

For leaves up to 3.5 m, 24 Vdc irreversible with limit switches on opening and closing.
Hyke
HykeKit
pages 50/53

- integrated control unit, with BlueBUS technology, Solemyo and Opera → **HK7024**
- without built-in control unit → **HK7224**
- **Kit** → **HYKEKCE**

For leaves up to 3 m,
irreversible.
Hyppo
pages 54/55

- 230 Vac with limit switch on opening and closing → **HY7005**
- 24 Vdc version with magnetic encoder. Compatible with control units with BlueBUS technology, Solemyo and Opera → **HY7024**

Pop
PopKit

Hopp
HoppKit

Hyke
HykeKit

Hyppo

Nice Selection guide

Follow the arrow and choose the right product

Underground installation, ultra compact

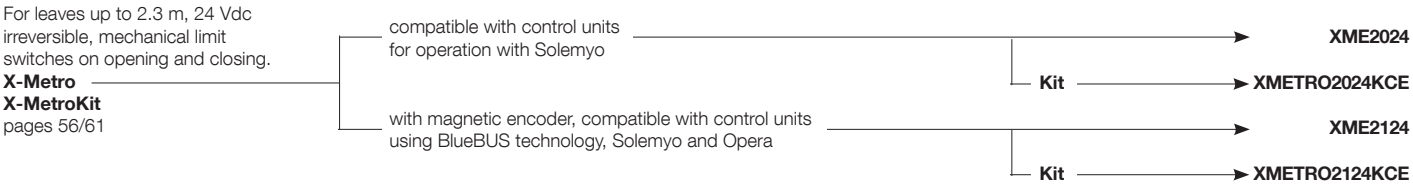

Underground installation

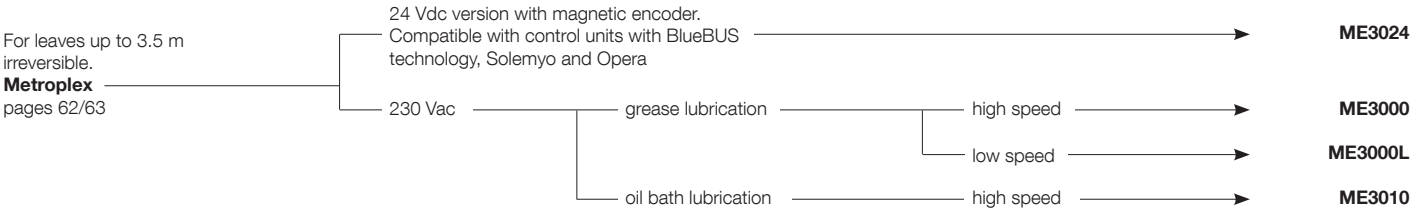

X-Metro
X-MetroKit

Metroplex

Big-Metro

Nice Toona 4

Sole myo | Opera | Blue BUS | 24V | 230V

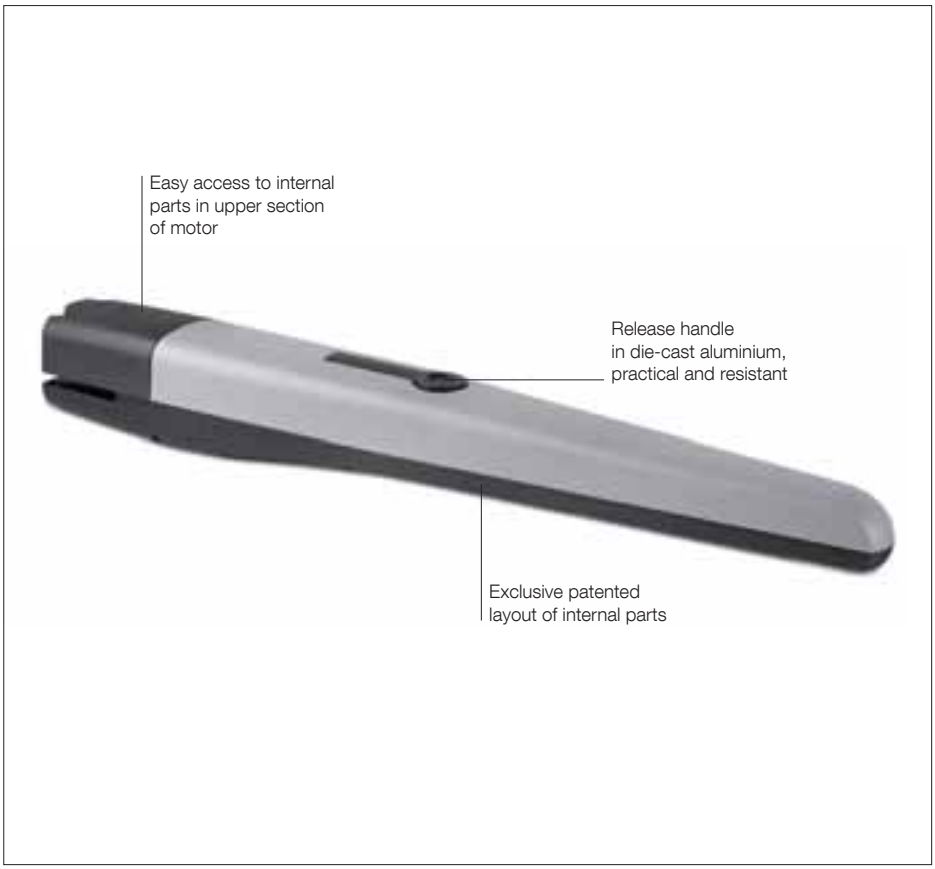

For swing gates with leaves up to 3 m.
Electromechanical gear motor, surface mounted.
Also available in 24 Vdc version, with magnetic encoder.
Ideal for residential use.

Reliable: durability thanks to the housing, made up of two tough aluminium shells with polyester paint finish; more resistant to atmospheric agents.

Internal moving parts completely in steel, light alloys and technopolymers.

Silent: patented layout of internal parts and lead nut in bronze.

Generously sized and practical connection compartment: rapid and easy access from above to internal parts located in the upper section of the motor.

Simple installation and maintenance; with built-in capacitor.

Recommended control units:
Mindy A3, A3F, A6, A6F, A60, A700F; for TO4024 Moonclever MC824H.

24 Vdc version with magnetic encoder. Perfect for intensive use, compatible with the control unit Moonclever MC824H:

- simple programming, by means of a single key;
- self-learning of opening and closing limit positions;
- automatic fault diagnostics;
- programming of pause time;
- pedestrian pass door;
- deceleration on opening and closing;
- obstacle detection with dual technology;
- operation in event of power failure by means of optional rechargeable batteries (PS324);
- provision for connection of latest generation resistive sensitive edges.

Code	Description	Pack/pallet
TO4024	Irreversible, 24 Vdc, with magnetic encoder, mechanical stop on opening	20
TO4005	Irreversible, 230 Vac, high speed, with limit switch on opening	20
TO4006	Irreversible, 230 Vac, high speed, with limit switch on opening and closing	20
TO4015	Irreversible, 230 Vac, low speed, with limit switch on opening	20
TO4605	Reversible, 230 Vac, high speed, with limit switch on opening	20

Technical specifications

Code	TO4024	TO4005	TO4006	TO4015	TO4605
Electrical data					
Power supply (Vac 50 Hz)*	-	230			
Power supply (Vdc)	24	-			
Absorption (A)	5	1.5			1.3
Power (W)	120	340			300
Performance data					
Speed (m/s)	0.016			0.013	0.016
Force (N)	1800				
Work cycle (cycles/hour)	95**	58		54	50
Dimensional and general data					
Protection level (IP)	44				
Working temp. (°C Min/Max)	-20 ÷ +50				
Dimensions (mm)	820x115x105 h				
Weight (kg)	6				

*60 Hz version available on request. ** With optimal installation.

Utilisation limits

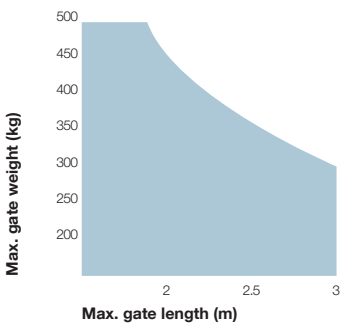

The shape, the height of the gate and the weather conditions can considerably reduce the values shown in the graph to the side. Use in windy areas 230 Vac models.

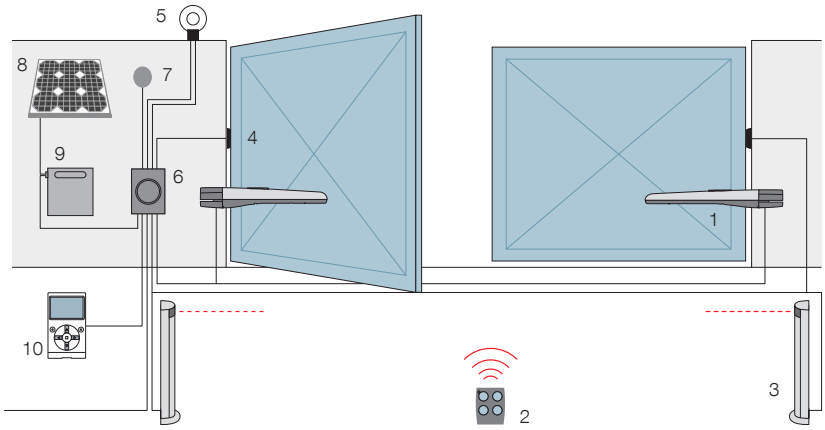

1. Toona **2.** Transmitter **3.** Photocells mounted on posts **4.** Photocells **5.** Flashing light **6.** Control unit **7.** Digital or key switches **8.** SYP* solar panel **9.** PSY24* battery box **10.** O-View* multifunction display.

*Optional connection to Solemyo and Opera systems.

Accessories

Total interchangeability with the series Moby: identical positions and fixing brackets

PLA6
Rear bracket 250 mm long.

Pc/pack 1

PLA14
Screw-adjustable rear bracket.

Pc/pack 2

PLA15
Screw-adjustable front bracket.

Pc/pack 2

PLA10
Vertical 12 V electric lock (required for gates longer than 3 m).

Pc/pack 1

PLA11
Horizontal 12 V electric lock (required for gates longer than 3 m).

Pc/pack 1

PLA13
Mechanical travel stops for closing and opening manoeuvres.

Pc/pack 4

Accessory

For 24 Vdc version

TS
Signboard.

Pc/pack 1

PS324
24 V battery with integrated battery charger.

Pc/pack 1

Solemyo system

The solar power kit Solemyo to automate gates, garage doors or barrier gates, including those located far from the power mains and without the need for costly and invasive excavation work.
See pages 186/187

Opera system

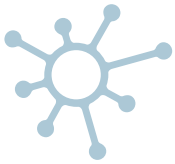

The innovative Opera system enables the installer to manage, program and control automation systems, also remotely, simply and safely, with significant savings in time.
See pages 140/141

Nice recommends customers order products in pallets in order to facilitate storage and delivery, and ensure packs are uniform. The number of packs per single pallet has been specified for this reason. Approximate draft.

Nice Toona 5

Sole myo | Opera | Blue BUS | 24V | 230V

For swing gates with leaves up to 5 m.
Electromechanical gear motor, surface mounted.
Also available in 24 Vdc version, with magnetic encoder.
Ideal for residential and industrial use.

Reliable: durability thanks to the housing, made up of two tough aluminium shells with polyester paint finish; more resistant to atmospheric agents.

Internal moving parts completely in steel, light alloys and technopolymers.

Silent: patented layout of internal parts and lead nut in bronze.

Generously sized and practical connection compartment: rapid and easy access from above to internal parts located in the upper section of the motor.

Simple installation and maintenance, with built-in capacitor.

TO5024I ideal for intensive work load, thanks to the torque of 2200 Nm, can work on continuous duty on large sized gates.

Recommended control units:
Mindy A3, A3F, A6, A6F, A60, A700F; for TO5024 and TO5024I Moonclever MC824H.

24 Vdc version with magnetic encoder. Perfect for intensive use, compatible with the control unit Moonclever MC824H:
- simple programming, by means of a single key;
- self-learning of opening and closing limit positions;
- automatic fault diagnostics;
- programming of pause time;
- pedestrian pass door;
- deceleration on opening and closing;
- obstacle detection with dual technology;
- operation in event of power failure by means of optional rechargeable batteries (PS324);
- provision for connection of latest generation resistive sensitive edges.

Code	Description	Pack/pallet
TO5024	Irreversible, 24 Vdc, with magnetic encoder, mechanical stop on opening	20
TO5024I	Irreversible, 24 Vdc, with magnetic encoder, mechanical stop on opening; for intensive use	20
TO5015	Irreversible, 230 Vac, low speed, with limit switch on opening	20
TO5016	Irreversible, 230 Vac, low speed, with limit switch on opening and closing	20
TO5605	Reversible, 230 Vac, high speed, with limit switch on opening	20

Technical specifications

Code	TO5024	TO5024I	TO5015	TO5016	TO5605
Electrical data					
Power supply (Vac 50 Hz)*	-		230		
Power supply (Vdc)	24		-		
Absorption (A)	5		1.5		1.3
Power (W)	120		340		300
Performance data					
Speed (m/s)	0.016	0.013			0.016
Force (N)	1800	2200	1800		
Work cycle (cycles/hour)	95**	75***	54		50
Dimensional and general data					
Protection level (IP)	44				
Working temp. (°C Min/Max)	-20 ÷ +50				
Dimensions (mm)	965x115x105 h				
Weight (kg)	7				

*60 Hz version available on request. ** With optimal installation. *** The reduction in number of manoeuvres with respect to the version TO5024 depends solely on the lower manoeuvre speed.

Utilisation limits

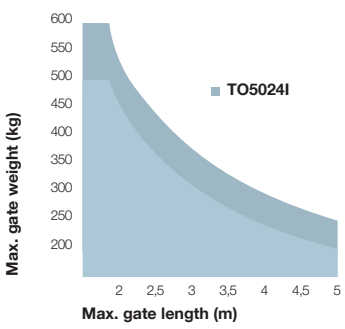

The shape, the height of the gate and the weather conditions can considerably reduce the values shown in the graph to the side. Use in windy areas 230 Vac models.

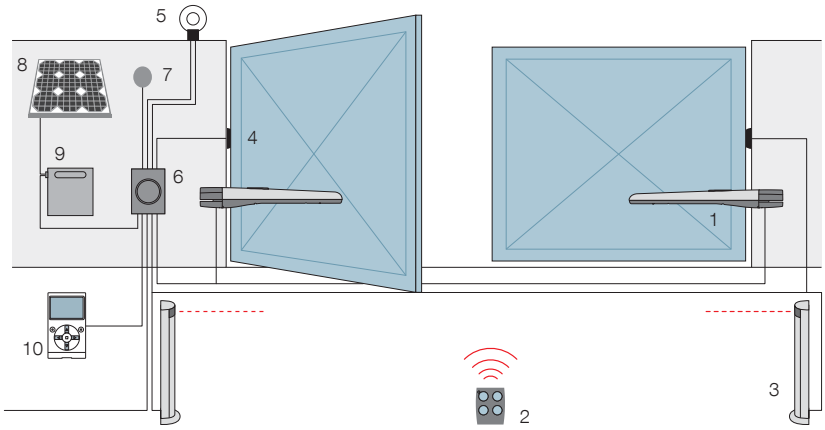

1. Toona **2.** Transmitter **3.** Photocells mounted on posts **4.** Photocells **5.** Flashing light **6.** Control unit **7.** Digital or key switches **8.** SYP* solar panel **9.** PSY24* battery box **10.** O-View* multifunction display.

*Optional connection to Solemyo and Opera systems.

Accessories

Total interchangeability with the series Moby: identical positions and fixing brackets

PLA6
Rear bracket 250 mm long.

Pc/pack 1

PLA8
Screw-adjustable front bracket.

Pc/pack 1

PLA10
Vertical 12 V electric lock (required for gates longer than 3 m).

Pc/pack 1

PLA11
Horizontal 12 V electric lock (required for gates longer than 3 m).

Pc/pack 1

PLA13
Mechanical travel stops for closing and opening manoeuvres.

Pc/pack 4

TS
Signboard.

Pc/pack 1

Accessory

For 24 Vdc version

PS324
24 V battery with integrated battery charger.

Pc/pack 1

Solemyo system

The solar power kit Solemyo to automate gates, garage doors or barrier gates, including those located far from the power mains and without the need for costly and invasive excavation work.
See pages 186/187

Opera system

The innovative Opera system enables the installer to manage, program and control automation systems, also remotely, simply and safely, with significant savings in time.
See pages 140/141

Nice recommends customers order products in pallets in order to facilitate storage and delivery, and ensure packs are uniform. The number of packs per single pallet has been specified for this reason. Approximate draft.

Nice Toona 7

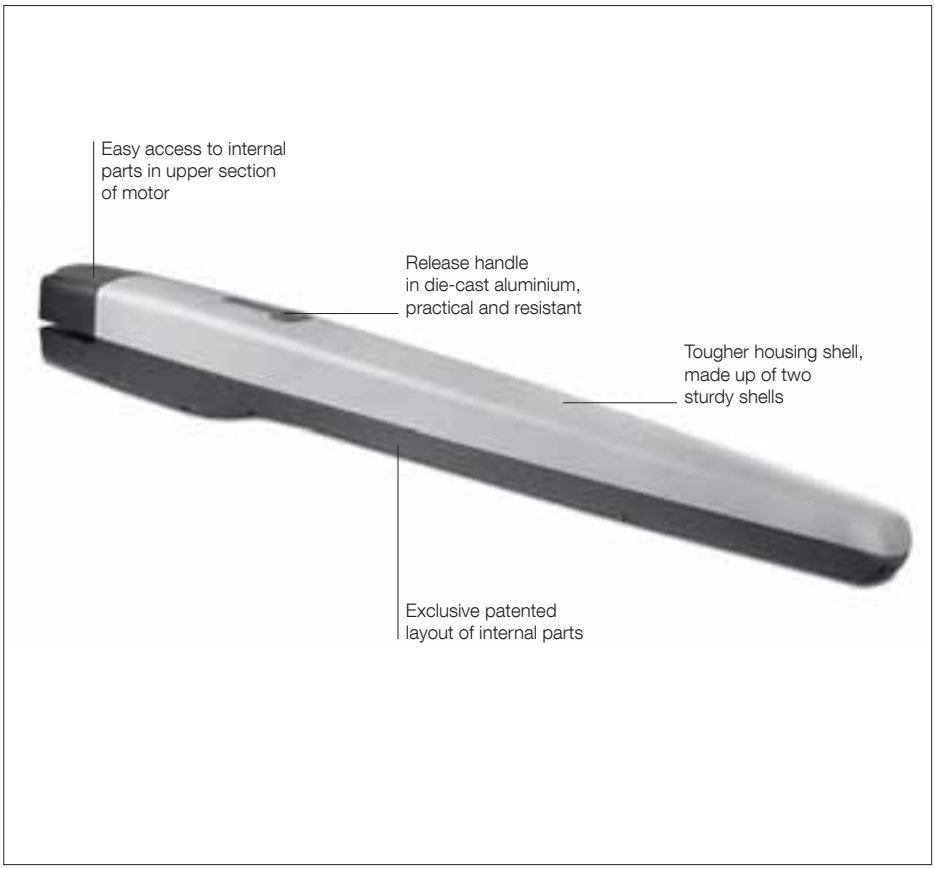

Code	Description	Pack/pallet
TO7024	Irreversible, 24 Vdc, with magnetic encoder, mechanical stop on opening and closing	20

For swing gates with leaves up to 7 m.
Electromechanical gear motor, surface mounted, powered at 24 Vdc, with magnetic encoder. Ideal for industrial installations, designed for intensive use.

Reliable: durability thanks to the housing, made up of two tough aluminium shells with polyester paint finish; more resistant to atmospheric agents.

Internal moving parts completely in steel, light alloys and technopolymers.

Silent: patented layout of internal parts and lead nut in bronze.

Generously sized and practical connection compartment: rapid and easy access from above to internal parts located in the upper section of the motor.

Control unit Moonclever MC824H:
- simple programming, by means of a single key;
- self-learning of opening and closing limit positions;
- automatic fault diagnostics;
- programming of pause time;
- pedestrian pass door;
- deceleration on opening and closing;
- obstacle detection with dual technology;
- operation in event of power failure by means of optional rechargeable batteries (PS324);
- provision for connection of latest generation resistive sensitive edges.

Technical specifications

Code	TO7024
Electrical data	
Power supply (Vac 50 Hz)	-
Power supply (Vdc)	24
Absorption (A)	5
Power (W)	120
Performance data	
Speed (m/s)	0.013
Force (N)	2700
Work cycle (cycles/hour)	41
Dimensional and general data	
Protection level (IP)	44
Working temp. (°C Min/Max)	-20 ÷ +50
Dimensions (mm)	1200x128x150 h
Weight (kg)	15

Utilisation limits

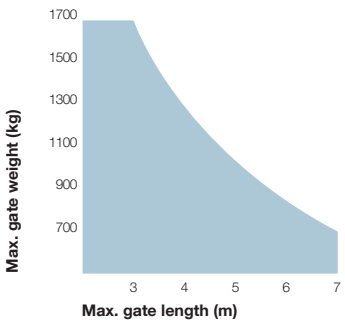

The shape, the height of the gate and the weather conditions can considerably reduce the values shown in the graph to the side.

Nice recommends customers order products in pallets in order to facilitate storage and delivery, and ensure packs are uniform. The number of packs per single pallet has been specified for this reason. Approximate draft.

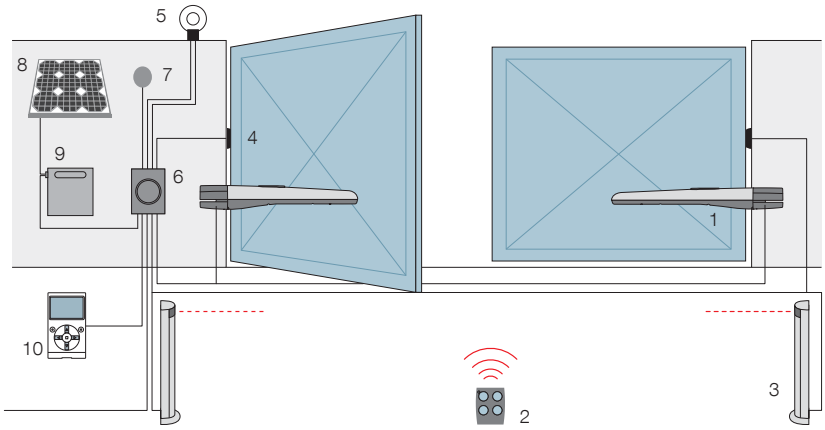

1. Toona **2.** Transmitter **3.** Photocells mounted on posts **4.** Photocells **5.** Flashing light **6.** Control unit **7.** Digital or key switches **8.** SYP* solar panel **9.** PSY24* battery box **10.** O-View* multifunction display.

*Optional connection to Solemyo and Opera systems.

Accessories

PLA10
Vertical 12 V electric lock (required for gates longer than 3 m).

Pc/pack 1

PLA11
Horizontal 12 V electric lock (required for gates longer than 3 m).

Pc/pack 1

TS
Signboard.

Pc/pack 1

PS324
24 V battery with integrated battery charger.

Pc/pack 1

Solemyo system

The solar power kit Solemyo to automate gates, garage doors or barrier gates, including those located far from the power mains and without the need for costly and invasive excavation work.
See pages 186/187

Opera system

The innovative Opera system enables the installer to manage, program and control automation systems, also remotely, simply and safely, with significant savings in time.
See pages 140/141

Nice ToonaKit

Sole myo | Opera | Blue BUS | 24V

TO4024

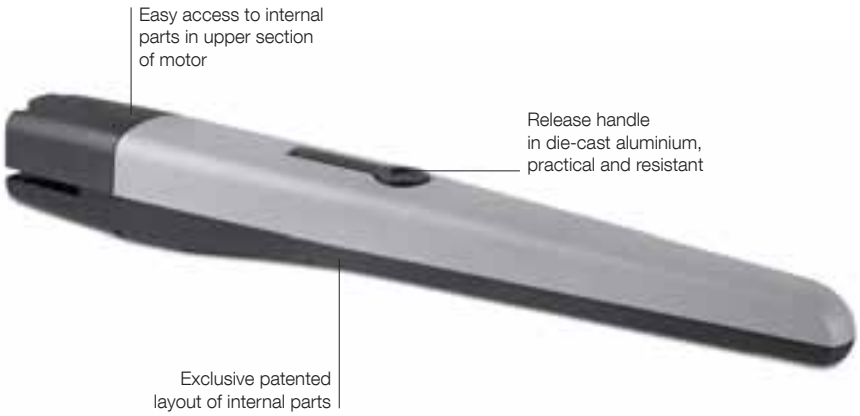

ON2

MC824H

MOFB

MOSE

MLBT

TS

The kit contains:

TO4024 2 electromechanical irreversible gear motors, surface mounted. With mechanical stop on opening.
ON2 1 transmitter 433.92 MHz, 2 channels. **MC824H** 1 control unit with OXI plug-in receiver.
MOFB 1 couple of external photocells designed for connection by Nice BlueBUS.
MOSE 1 key selector switch for outdoor installation. **MLBT** 1 flashing light with integrated aerial.
TS 1 signboard.

Code	Description	Pack/pallet
TOONA4024KCE	Kit for swing gates with leaves up to 3 m, 24 Vdc, surface mounted	12

N.B. The content of the package may vary: consult the retailer.

For swing gates with leaves **up to 3 m,** ideal for residential use.

Electromechanical gear motor, surface mounted, powered at 24 Vdc, with magnetic encoder.

Reliable: durability thanks to the housing, made up of two tough aluminium shells with polyester paint finish; more resistant to atmospheric agents.

Internal moving parts completely in steel, light alloys and technopolymers.

Silent: patented layout of internal parts and lead nut in bronze.

Generously sized and practical connection compartment:
rapid and easy access from above to internal parts located in the upper section of the motor.

Ease of installation and maintenance.

Control unit Moonclever MC824H:

- simple programming, by means of a single key;
- self-learning of opening and closing limit positions;
- automatic fault diagnostics;
- programming of pause time;
- pedestrian pass door;
- deceleration on opening and closing;
- obstacle detection with dual technology;
- operation in event of power failure by means of optional rechargeable batteries (PS324);
- provision for connection of latest generation resistive sensitive edges.

Technical specifications

Code	**TO4024**
Electrical data	
Power supply (Vdc)	24
Absorption (A)	5
Power (W)	120
Performance data	
Speed (m/s)	0.016
Force (N)	1800
Work cycle (cycles/hour)	95*
Dimensional and general data	
Protection level (IP)	44
Working temp. (°C Min/Max)	-20 ÷ +50
Dimensions (mm)	820x115x105 h
Weight (kg)	6

* With optimal installation.

Utilisation limits

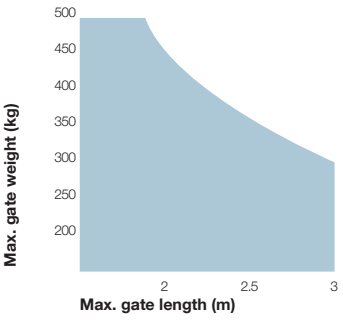

The shape, the height of the gate and the weather conditions can considerably reduce the values shown in the graph to the side.

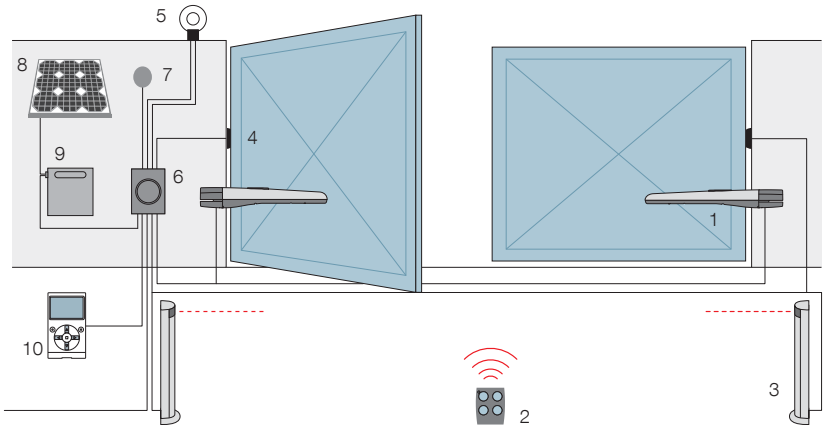

1. Toona **2.** Transmitter **3.** Photocells mounted on posts **4.** Photocells **5.** Flashing light **6.** Control unit **7.** Digital or key switches **8.** SYP* solar panel **9.** PSY24* battery box **10.** O-View* multifunction display.

*Optional connection to Solemyo and Opera systems.

Accessories

Total interchangeability with the series Moby: identical positions and fixing brackets

PLA6
Rear bracket 250 mm long.

Pc/pack 1

PLA14
Screw-adjustable rear bracket.

Pc/pack 2

PLA15
Screw-adjustable front bracket.

Pc/pack 2

PLA10
Vertical 12 V electric lock (required for gates longer than 3 m).

Pc/pack 1

PLA11
Horizontal 12 V electric lock (required for gates longer than 3 m).

Pc/pack 1

PLA13
Mechanical travel stops for closing and opening manoeuvres.

Pc/pack 4

PS324
24 V battery with integrated battery charger.

Pc/pack 1

Solemyo system

The solar power kit Solemyo to automate gates, garage doors or barrier gates, including those located far from the power mains and without the need for costly and invasive excavation work.
See pages 186/187

Opera system

The innovative Opera system enables the installer to manage, program and control automation systems, also remotely, simply and safely, with significant savings in time.
See pages 140/141

Nice recommends customers order products in pallets in order to facilitate storage and delivery, and ensure packs are uniform. The number of packs per single pallet has been specified for this reason. Approximate draft.

Nice WingoKit

230V

WG4000

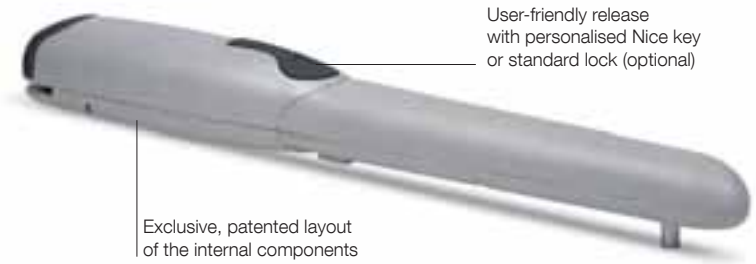

FLO2R-S

A400

MOF

MOSE

MLT

PLA13
TS

The kit contains:

WG4000 2 surface-mounted electromechanical gear motors, with Nice key release.
FLO2R-S 1 transmitter 433.92 MHz, 2 channels. **A400** 1 control unit A400 with SMXI plug-in receiver.
MOF 1 pair of photocells for outdoor installation. **MOSE** 1 key selector switch for outdoor installation.
MLT 1 flashing light with integrated aerial. **PLA13** 2 travel stops for opening manoeuvres. **TS** 1 signboard.

For swing gates with leaves up to 2 m, surface mounted.

Reliable and silent:
patented layout of internal parts, fewer moving parts.

Easy to install: after the gear motor has been assembled, all electrical connections are made from above.

Built-in capacitor.

User-friendly release with personalised Nice key or standard lock (optional).

Pre-assembled, travel stops PLA13 on opening.

A400 control unit for 2 motors, microprocessor logic, with obstacle detection system, IP55 case.

Code	Description	Pack/pallet
WINGOKCE	Kit for swing gates with leaves up to 2 m, surface mounted	12

N.B. The content of the package may vary: consult the retailer.

Technical specifications

Code	**WG4000**
Electrical data	
Power supply (Vac 50 Hz)*	230
Absorption (A)	1.5
Power (W)	200
Performance data	
Speed (m/s)	0.016
Force (N)	1500
Work cycle (cycles/hour)	30
Dimensional and general data	
Protection level (IP)	44
Working temp. (°C Min/Max)	-20 ÷ +50
Dimensions (mm)	770x98x95 h
Weight (kg)	6

*60 Hz version available on request.

Utilisation limits

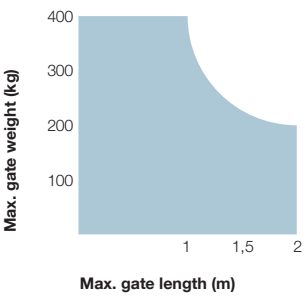

Nice recommends customers order products in pallets in order to facilitate storage and delivery, and ensure packs are uniform. The number of packs per single pallet has been specified for this reason. Approximate draft.

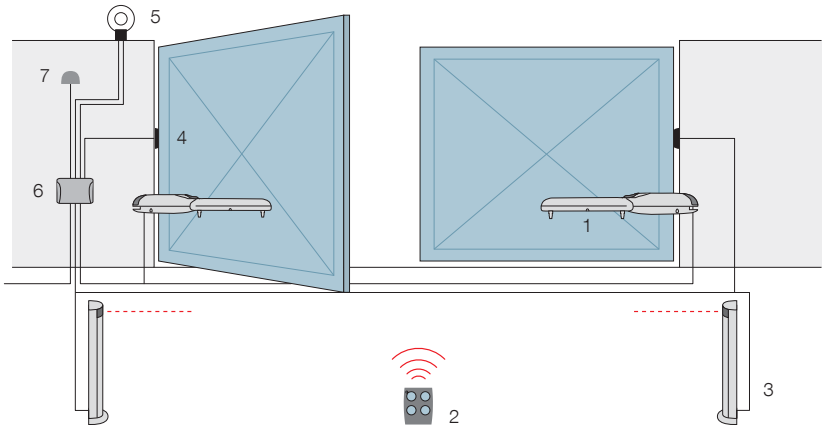

1. Wingo **2.** Transmitter **3.** Photocells mounted on posts **4.** Photocells **5.** Flashing light **6.** Control unit **7.** Digital or key switches.

Accessories

PLA14
Screw-adjustable rear bracket.

Pc/pack 2

PLA15
Screw-adjustable front bracket.

Pc/pack 2

CM-B
Pawl with two metal release keys.

PLA13
Mechanical travel stops for closing and opening manoeuvres.

Pc/pack 4

Nice WingoKit 4024

Sole myo 24V

WG4024

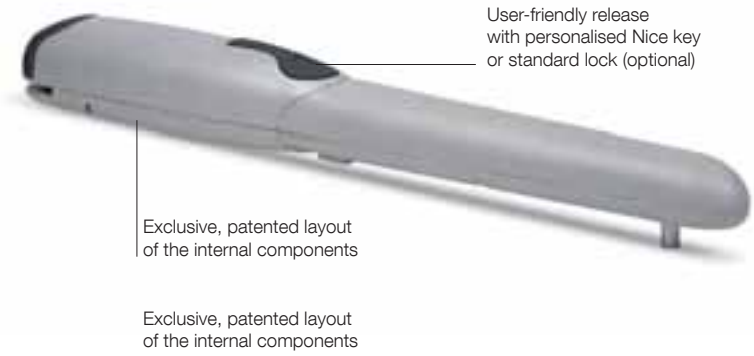

FLO2R-S

MC424L

MOF

MOSE

ML24T

PLA13
TS

The kit contains:

WG4024 2 surface-mounted electromechanical gear motors, with Nice key release.
FLO2R-S 1 transmitter 433.92 MHz, 2 channels. **MC424L** 1 control unit with SMXI plug-in receiver.
MOF 1 pair of photocells for outdoor installation. **MOSE** 1 key selector switch for outdoor installation.
ML24T 1 flashing light with integrated aerial. **PLA13** 2 travel stops for opening manoeuvres.
TS 1 signboard.

Code	Description	Pack/pallet
WINGO4024KCE	Kit for swing gates with leaves up to 2 m, 24 Vdc, surface mounted	12

N.B. The content of the package may vary: consult the retailer.

For swing gates with leaves up to 2 m, surface mounted.

24 Vdc electromechanical gear motor.

Reliable and silent: patented layout of internal parts, fewer moving parts.

Easy to install: after the gear motor has been assembled, all electrical connections are made from above.

User-friendly release with personalised Nice key or standard lock (optional).

Pre-assembled, travel stops PLA13 on opening.

Moonclever control unit MC424L:

- simple programming, by means of a single key;
- clutch with anti-crush safety feature;
- automatic memorization of limit switches on opening and closing with self-learning function;
- programming of pause time;
- pedestrian pass door;
- deceleration on opening and closing;
- obstacle detection system;
- can be linked to the 8.2 KOhm resistive sensitive edge;
- continues to work even during power failures using optional (PS124) batteries that fit inside the control unit.

Technical specifications

Code	WG4024
Electrical data	
Power supply (Vdc)	24
Absorption (A)	3.5
Power (W)	85
Performance data	
Speed (m/s)	0.018
Force (N)	1500
Work cycle (cycles/hour)	30
Dimensional and general data	
Protection level (IP)	44
Working temp. (°C Min/Max)	-20 ÷ +50
Dimensions (mm)	770x98x95 h
Weight (kg)	17

Utilisation limits

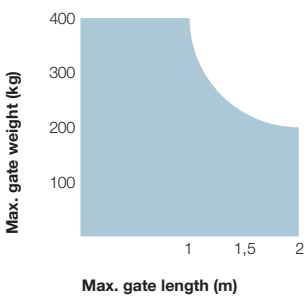

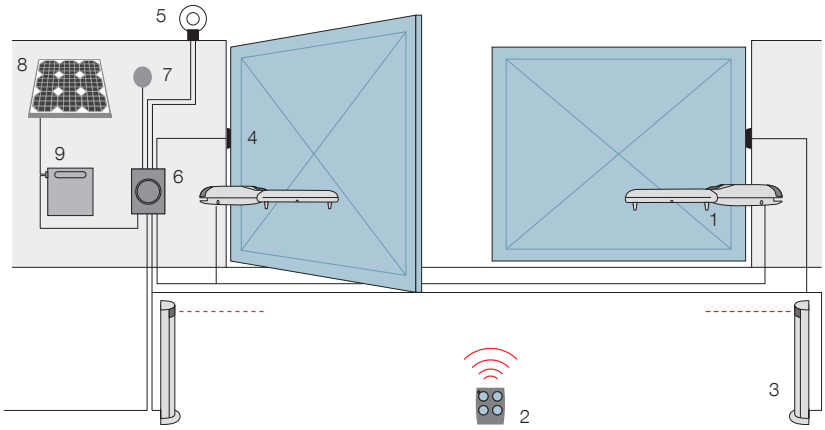

1. Wingo **2.** Transmitter **3.** Photocells mounted on posts **4.** Photocells **5.** Flashing light **6.** Control unit **7.** Digital or key switches **8.** SYP* solar panel **9.** PSY24* battery box.

*Optional connection to Solemyo system.

Accessories

PS124
24 V battery with integrated battery charger.

Pc/pack 1

PLA14
Screw-adjustable rear bracket.

Pc/pack 2

PLA15
Screw-adjustable front bracket.

Pc/pack 2

CM-B
Pawl with two metal release keys.

PLA10
Vertical 12 V electric lock (required for gates longer than 3 m).

Pc/pack 1

PLA11
Horizontal 12 V electric lock (required for gates longer than 3 m).

Pc/pack 1

PLA13
Mechanical travel stops for closing and opening manoeuvres.

Pc/pack 4

Solemyo system

The solar power kit Solemyo to automate gates, garage doors or barrier gates, including those located far from the power mains and without the need for costly and invasive excavation work.
See pages 186/187

Nice recommends customers order products in pallets in order to facilitate storage and delivery, and ensure packs are uniform. The number of packs per single pallet has been specified for this reason. Approximate draft.

Nice Wingo5Kit

230V

WG5000

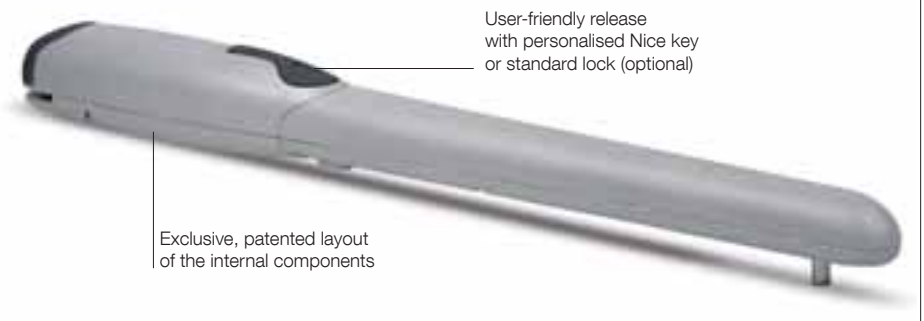

FLO2R-S

A60

MOF

MOSE

MLT

PLA13
TS

The kit contains:

WG5000 2 surface-mounted electromechanical gear motors, with Nice key release.
FLO2R-S 1 transmitter 433.92 MHz, 2 channels. **A60** 1 control unit A60 with SMXI plug-in receiver.
MOF 1 pair of photocells for outdoor installation. **MOSE** 1 key selector switch for outdoor installation.
MLT 1 flashing light with integrated aerial. **PLA13** 2 travel stops for opening manoeuvres. **TS** 1 signboard.

For swing gates with leaves up to 3.5 m, surface mounted.

Reliable and silent:
patented layout of internal parts, fewer moving parts.

Easy to install: after the gear motor has been assembled, all electrical connections are made from above.

Built-in capacitor.

User-friendly release with personalised Nice key or standard lock (optional).

Pre-assembled, travel stops PLA13 on opening.

A60 control unit for two 230 Vac motors with electronic clutch and slowdown, IP55 casing.

Code	Description	Pack/pallet
WINGO5KCE	Kit for swing gates with leaves up to 3.5 m, surface mounted	12

N.B. The content of the package may vary: consult the retailer.

Technical specifications

Code	**WG5000**
Electrical data	
Power supply (Vac 50 Hz)*	230
Absorption (A)	1.5
Power (W)	200
Performance data	
Speed (m/s)	0.013
Force (N)	1700
Work cycle (cycles/hour)	30
Dimensional and general data	
Protection level (IP)	44
Working temp. (°C Min/Max)	-20 ÷ +50
Dimensions (mm)	920x98x95 h
Weight (kg)	6

*60 Hz version available on request.

Utilisation limits

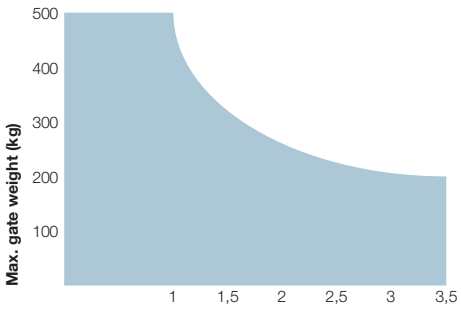

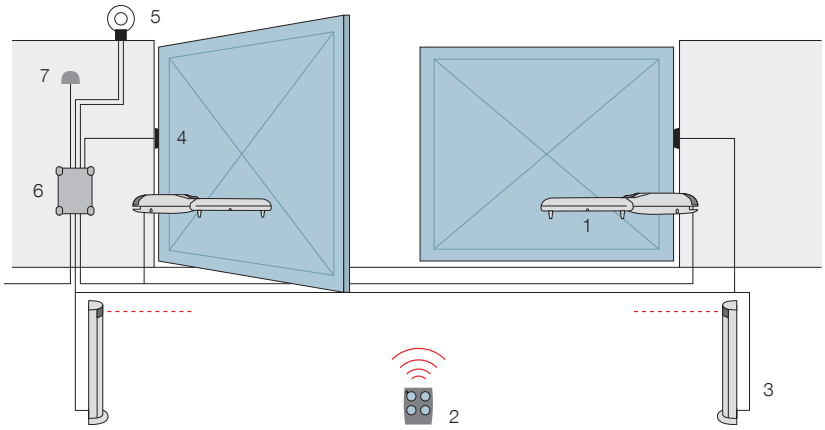

1. Wingo **2.** Transmitter **3.** Photocells mounted on posts **4.** Photocells **5.** Flashing light **6.** Control unit **7.** Digital or key switches.

Accessories

PLA6
Rear bracket 250 mm long.

Pc/pack 1

PLA8
Screw-adjustable front bracket.

Pc/pack 1

CM-B
Pawl with two metal release keys.

PLA10
Vertical 12 V electric lock (required for gates longer than 3 m).

Pc/pack 1

PLA11
Horizontal 12 V electric lock (required for gates longer than 3 m).

Pc/pack 1

PLA13
Mechanical travel stops for closing and opening manoeuvres.

Pc/pack 4

Nice recommends customers order products in pallets in order to facilitate storage and delivery, and ensure packs are uniform. The number of packs per single pallet has been specified for this reason. Approximate draft.

Nice WingoKit 5024

Sole myo 24V

WG5024

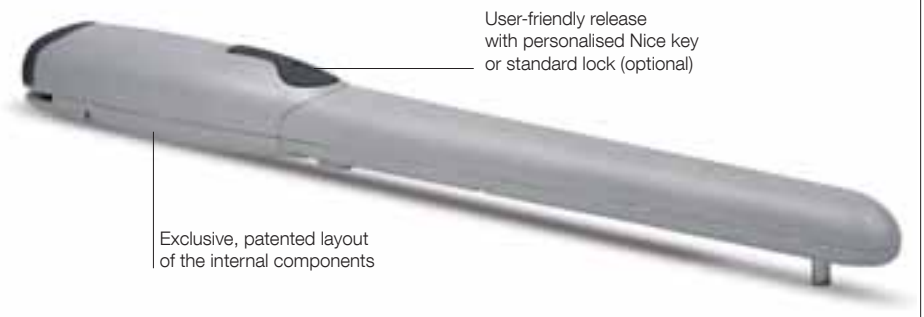

FLO2R-S

MC424L

MOF

MOSE

ML24T

PLA13
TS

The kit contains:

WG5024 2 surface-mounted electromechanical gear motors, with Nice key release.
FLO2R-S 1 transmitter 433.92 MHz, 2 channels. **MC424L** 1 control unit with SMXI plug-in receiver.
MOF 1 pair of photocells for outdoor installation. **MOSE** 1 key selector switch for outdoor installation.
ML24T 1 flashing light with integrated aerial. **PLA13** 2 travel stops for opening manoeuvres.
TS 1 signboard.

Code	Description	Pack/pallet
WINGO5024KCE	Kit for swing gates with leaves up to 3.5 m, 24 Vdc, surface mounted	12

N.B. The content of the package may vary: consult the retailer.

For swing gates with leaves up to 3.5 m, surface mounted.

24 Vdc electromechanical gear motor.

Reliable and silent:
patented layout of internal parts, fewer moving parts.

Easy to install: after the gear motor has been assembled, all electrical connections are made from above.

User-friendly release with personalised Nice key or standard lock (optional).

Pre-assembled, travel stops PLA13 on opening.

Moonclever control unit MC424L:
- simple programming, by means of a single key;
- clutch with anti-crush safety feature;
- automatic memorization of limit switches on opening and closing with self-learning function;
- programming of pause time;
- pedestrian pass door;
- deceleration on opening and closing;
- obstacle detection system;
- can be linked to the 8.2 KOhm resistive sensitive edge;
- continues to work even during power failures using optional (PS124) batteries that fit inside the control unit.

Technical specifications

Code	WG5024
Electrical data	
Power supply (Vdc)	24
Absorption (A)	3.5
Power (W)	85
Performance data	
Speed (m/s)	0.016
Force (N)	1500
Work cycle (cycles/hour)	30
Dimensional and general data	
Protection level (IP)	44
Working temp. (°C Min/Max)	-20 ÷ +50
Dimensions (mm)	920x98x95 h
Weight (kg)	18

Utilisation limits

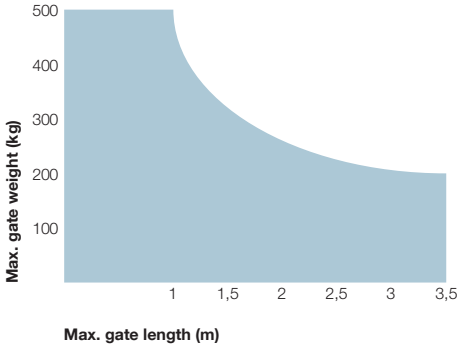

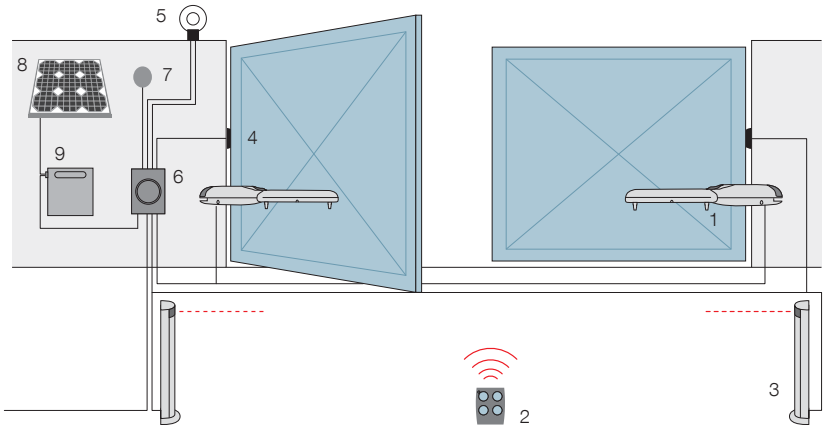

1. Wingo **2.** Transmitter **3.** Photocells mounted on posts **4.** Photocells **5.** Flashing light **6.** Control unit **7.** Digital or key switches **8.** SYP* solar panel **9.** PSY24* battery box.

*Optional connection to Solemyo system.

Accessories

PS124
24 V battery with integrated battery charger.

Pc/pack 1

PLA6
Rear bracket 250 mm long.

Pc/pack 1

PLA8
Screw-adjustable front bracket.

Pc/pack 1

CM-B
Pawl with two metal release keys.

PLA10
Vertical 12 V electric lock (required for gates longer than 3 m).

Pc/pack 1

PLA11
Horizontal 12 V electric lock (required for gates longer than 3 m).

Pc/pack 1

PLA13
Mechanical travel stops for closing and opening manoeuvres.

Pc/pack 4

Solemyo system

The solar power kit Solemyo to automate gates, garage doors or barrier gates, including those located far from the power mains and without the need for costly and invasive excavation work.
See pages 186/187

Nice recommends customers order products in pallets in order to facilitate storage and delivery, and ensure packs are uniform. The number of packs per single pallet has been specified for this reason. Approximate draft.

Nice WalkyKit 1024

Sole myo | Opera | Blue BUS | 24V

WL1024C

ON2

TS

The kit contains:

WL1024C 1 electromechanical gear motor, surface mounted, with built-in control unit and OXI plug-in receiver.
ON2 1 transmitter 433.92 MHz, 2 channels.
TS 1 signboard.

Code	Description	Pack/pallet
WALKY1024KCE	Kit for swing gates with leaves up to 1.8 m, 24 Vdc, surface mounted	18

N.B. The content of the package may vary: consult the retailer.

For swing gates with leaves up to 1.8 m.

Especially suited to gates in wood or PVC.
Irreversible electromechanical gear motor at 24 Vdc, with articulated arm.

Ultra compact: ideal for pedestrian gates, recommended for small posts (width 8 cm).

Safe: thanks to the irreversible motor and anti-shear arm with built-in mechanical stop on closure (with installation of entire arm).

Practical: the articulated arm enables installation in specific conditions, such as in the presence of small walls or obstacles adjacent to the post.

Quick: no waiting in front of the gate, just 7 seconds to open or close (in optimal installation conditions, with reduced arm and 90° opening).

Convenient: incorporable flashing Led indicator, with courtesy light function (WLT, optional); rapid motor release for manual movement of the gate.

Built-in control unit:
- simple programming;
- self-learning of opening and closing limit positions;
- automatic fault diagnostics;
- programming of pause time;
- pedestrian pass door;
- deceleration on opening and closing;
- provision for connection of latest generation resistive sensitive edges.

No black out: operation in the event of a power failure by means of optional batteries (PS424) housed inside the motor.

Technical specifications

Code	WL1024C
Electrical data	
Power supply (Vac 50/60 Hz)	230
Power supply (Vdc)	-
Absorption (A)	0.8
Power (W)	120
Performance data	
Speed (Rpm)	1.5 - 2.2
Torque (Nm)	120
Work cycle (cycles/hour)	50
Dimensional and general data	
Protection level (IP)	44
Working temp. (°C Min/Max)	-20° ÷ +50°
Dimensions (mm)	90x125x385 h
Weight (kg)	4.8

Utilisation limits

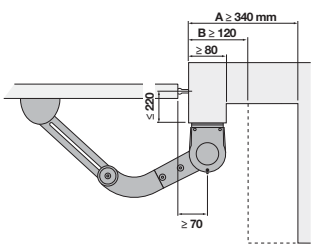

A Entire arm
B Reduced arm

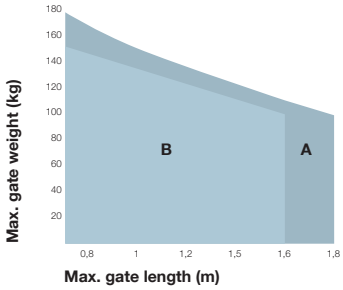

The shape, the height of the gate and the weather conditions can considerably reduce the values shown in the graph to the side.

Nice recommends customers order products in pallets in order to facilitate storage and delivery, and ensure packs are uniform. The number of packs per single pallet has been specified for this reason. Approximate draft.

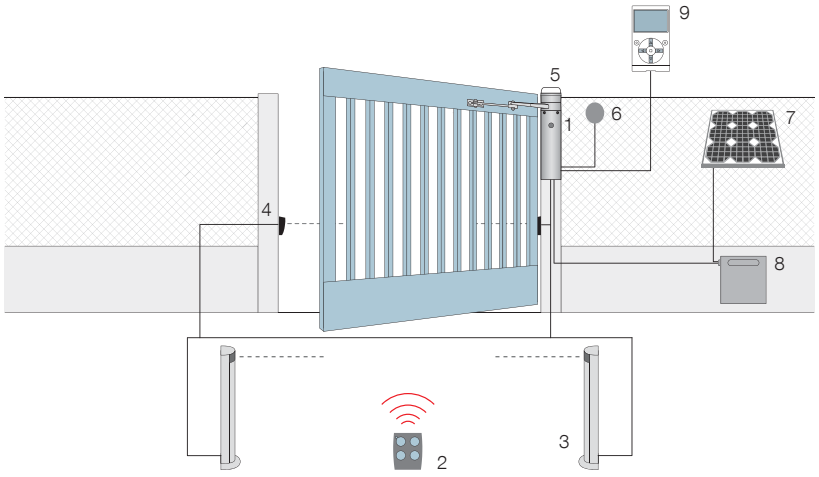

1. Walky **2.** Transmitter **3.** Photocells mounted on posts **4.** Photocells **5.** Flashing light **6.** Digital or key switches **7.** SYP* solar panel **8.** PSY24* battery box **9.** O-View* multifunction display.

*Optional connection to Solemyo and Opera systems.

Accessories

WLA1
Spare control unit, for WL1024C.

PS424
Buffer battery.

Pc/pack 1

PLA10
Vertical 12 V electric lock (required for gates longer than 3 m).

Pc/pack 1

PLA11
Horizontal 12 V electric lock (required for gates longer than 3 m).

Pc/pack 1

Wallyght

WLT
Multi-function Led indicator.
See pages 203

Pc/pack 1

Solemyo system

The solar power kit Solemyo to automate gates, garage doors or barrier gates, including those located far from the power mains and without the need for costly and invasive excavation work.
See pages 186/187

Opera system

The innovative Opera system enables the installer to manage, program and control automation systems, also remotely, simply and safely, with significant savings in time.
See pages 140/141

Nice WalkyKit 2024

Sole myo | Opera | Blue BUS | 24V

WL1024C + WL1024

ON2

MOFB

MOSE

WLT

TS

The kit contains:

WL1024C + WL1024 2 electromechanical gear motors, surface mounted. WL1024C (with control unit and OXI plug-in receiver), WL1024 (without control unit). **ON2** 1 transmitter 433.92 MHz, 2 channels. **MOFB** 1 couple of external photocells designed for connection by Nice BlueBUS. **MOSE** 1 key selector switch for outdoor installation. **WLT** 1 flashing light. **TS** 1 signboard.

For swing gates with leaves up to 1.8 m.

Especially suited to gates in wood or PVC. Irreversible electromechanical gear motor at 24 Vdc, with articulated arm.

Ultra compact: ideal for pedestrian gates, recommended for small posts (width 8 cm).

Safe: thanks to the irreversible motor and anti-shear arm with built-in mechanical stop on closure (with installation of entire arm).

Practical: the articulated arm enables installation in specific conditions, such as in the presence of small walls or obstacles adjacent to the post.

Quick: no waiting in front of the gate, just 7 seconds to open or close (in optimal installation conditions, with reduced arm and 90° opening).

Convenient: incorporable flashing Led indicator, with courtesy light function (WLT, optional); rapid motor release for manual movement of the gate.

Built-in **control unit:**

- simple programming;
- self-learning of opening and closing limit positions;
- automatic fault diagnostics;
- programming of pause time;
- pedestrian pass door;
- deceleration on opening and closing;
- provision for connection of latest generation resistive sensitive edges.

No black out: operation in the event of a power failure by means of optional batteries (PS424) housed inside the motor.

Code	Description	Pack/pallet
WALKY2024KCE	Kit for swing gates with leaves up to 1.8 m, 24 Vdc, with articulated arm, surface mounted	18

N.B. The content of the package may vary: consult the retailer.

Technical specifications

Code	WL1024C	WL1024
Electrical data		
Power supply (Vac 50/60 Hz)	230	-
Power supply (Vdc)	-	24
Absorption (A)	0.8	2
Power (W)	120	30
Performance data		
Speed (Rpm)	1.5 - 2.2	
Torque (Nm)	120	
Work cycle (cycles/hour)	50	
Dimensional and general data		
Protection level (IP)	44	
Working temp. (°C Min/Max)	-20° ÷ +50°	
Dimensions (mm)	90x125x385 h	
Weight (kg)	4.8	4.3

Utilisation limits

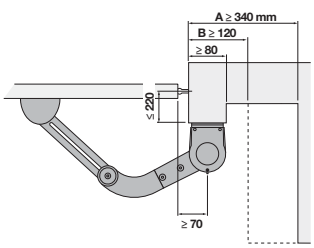

A Entire arm

B Reduced arm

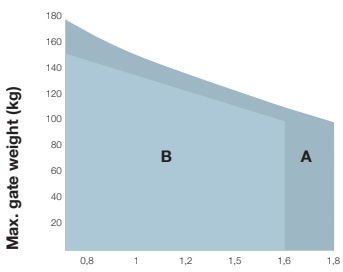

The shape, the height of the gate and the weather conditions can considerably reduce the values shown in the graph to the side.

Nice recommends customers order products in pallets in order to facilitate storage and delivery, and ensure packs are uniform. The number of packs per single pallet has been specified for this reason. Approximate draft.

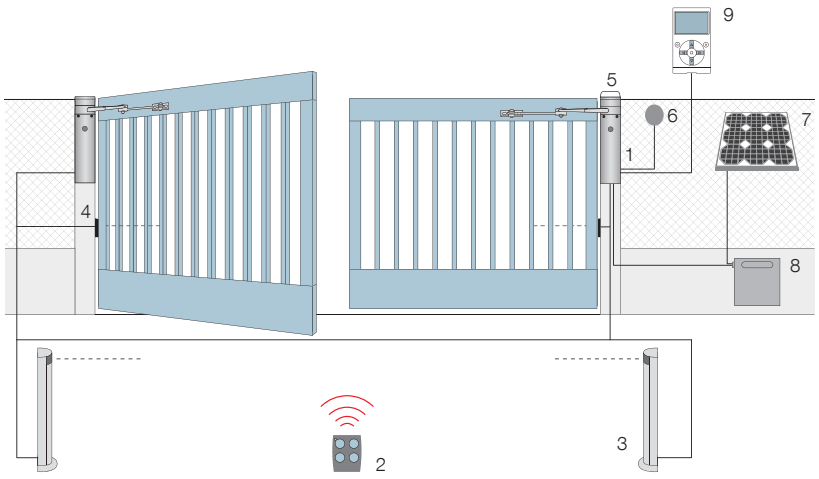

1. Walky **2.** Transmitter **3.** Photocells mounted on posts **4.** Photocells **5.** Flashing light **6.** Digital or key switches **7.** SYP* solar panel **8.** PSY24* battery box **9.** O-View* multifunction display.

*Optional connection to Solemyo and Opera systems.

Accessories

WLA1
Spare control unit, for WL1024C.

PS424
Buffer battery.

Pc/pack 1

PLA10
Vertical 12 V electric lock (required for gates longer than 3 m).

Pc/pack 1

PLA11
Horizontal 12 V electric lock (required for gates longer than 3 m).

Pc/pack 1

Wallyght

WLT
Multi-function Led indicator.
See pages 203

Pc/pack 1

Solemyo system

The solar power kit Solemyo to automate gates, garage doors or barrier gates, including those located far from the power mains and without the need for costly and invasive excavation work.
See pages 186/187

Opera system

The innovative Opera system enables the installer to manage, program and control automation systems, also remotely, simply and safely, with significant savings in time.
See pages 140/141

Nice Pop

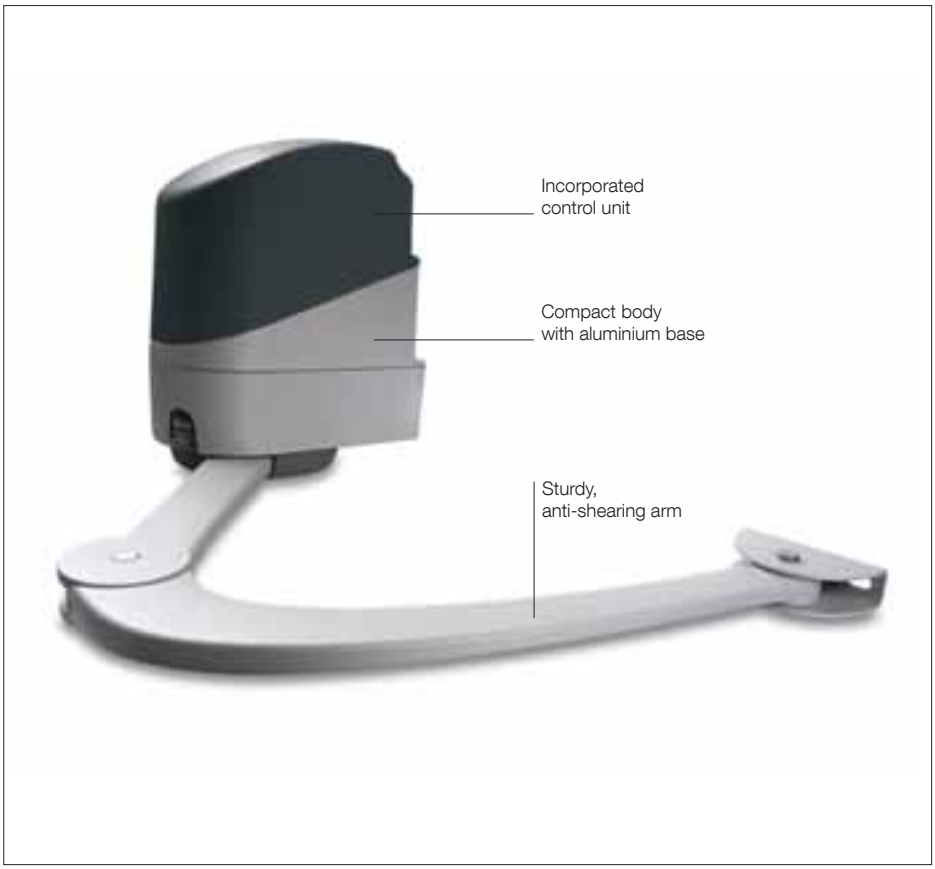

Code	Description	Pack/pallet
PP7024	Irreversible, 24 Vdc, with articulated arm, with built-in control unit	22
PP7124	Irreversible, 24 Vdc, with control unit equipped with Nice BlueBUS technology, compatible for operation with Opera and Solemyo	22
PP7224	Irreversible, 24 Vdc, with articulated arm, without control unit	22

For swing gates with leaves up to 2 m, and versions with large pillars and lightweight structures.
Irreversible electromechanical 24 Vdc gear motor **with articulated arm**, surface mounted. Intensive use.

24 Vdc versions complete with limit switch on opening:
- with built-in control unit, compatible for operation with Solemyo system (PP7024);
- with built-in control unit, compatible for operation with Opera and Solemyo systems and Nice BlueBUS technology (PP7124);
- without control unit (PP7224).

Resistant and compact: 167 mm in width, ideal for any kind of post. Small shockproof body with aluminium base.

Energy saving, respect for the environment, autonomy: 3 standby modes to reduce mains consumption, or battery power consumption if connected to the Solemyo kit.

Powerful: thanks to the 250 Nm torque (in the versions PP7124 or PP7124+PP7224).

No blackout: with the optional batteries (PS124) housed inside the gear motor.

User friendly: release with personalized Nice key, designed for cord-type release.

Easy to install: no welding.

Built-in control unit.
Just 3 keys to facilitate programming:
- deceleration on opening and closing;
- obstacle detection system, can be linked to the 8.2 KOhm resistive sensitive edge, fototest;
- easy option of connecting additional pairs of photocells, foto2 (for PP7124);
- automatic memorization of limit switches on opening and closing with self-learning function;
- programming of pause time;
- pedestrian open and partial open.

Everything under control: thanks to the **provision for operation with the Opera BUS T4 system, the O-View** control unit can be used to expand the options for programming, control and diagnostics of the automation, both on site and remotely.

Technical specifications

Code	PP7024	PP7124	PP7224*
Electrical data			
Power supply (Vac 50/60 Hz)	230		-
Power supply (Vdc)	-		24
Absorption (A)	1	1,3	3 - 4**
Power (W)	75	280	75 - 100**
Performance data			
Speed (Rpm)	1,68		
Torque (Nm)	180	250	180 - 250**
Work cycle (cycles/hour)	25	35	25 - 35**
Dimensional and general data			
Protection level (IP)	44		
Working temp. (°C Min/Max)	-20 ÷ +50		
Dimensions (mm)	167x254x315 h		
Weight (kg)	10		9

* Version without control unit ** Only if associated with PP7124

Utilisation limits

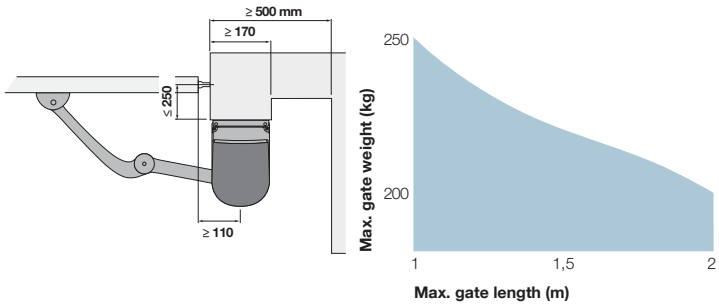

The shape, the height of the gate and the weather conditions can considerably reduce the values shown in the graph to the side.

Nice recommends customers order products in pallets in order to facilitate storage and delivery, and ensure packs are uniform. The number of packs per single pallet has been specified for this reason. Approximate draft.

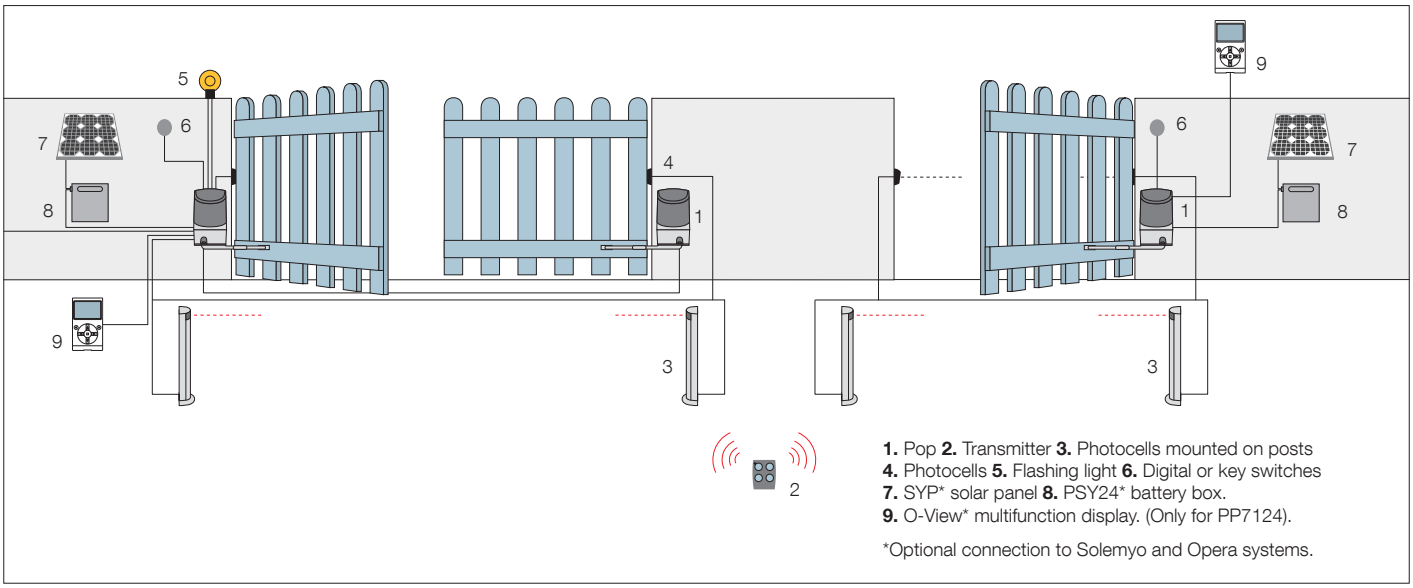

1. Pop **2.** Transmitter **3.** Photocells mounted on posts
4. Photocells **5.** Flashing light **6.** Digital or key switches
7. SYP* solar panel **8.** PSY24* battery box.
9. O-View* multifunction display. (Only for PP7124).

*Optional connection to Solemyo and Opera systems.

Accessories

POA3
Spare control unit for PP7124.

POA1
Spare control unit for PP7024.

PS124
24 V battery with integrated battery charger.

Pc/pack 1

PLA10
Vertical 12 V electric lock (required for gates longer than 3 m).

Pc/pack 1

PLA11
Horizontal 12 V electric lock (required for gates longer than 3 m).

Pc/pack 1

KIO
Key-operated selector switch for low voltage contacts, with release mechanism for metal cord.

Pc/pack 1

KA1
6 m cable release kit for KIO.

Pc/pack 1

TS
Signboard.

Pc/pack 1

Solemyo system

The solar power kit Solemyo to automate gates, garage doors or barrier gates, including those located far from the power mains and without the need for costly and invasive excavation work.
See pages 186/187

Opera system

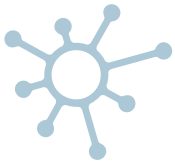

The innovative Opera system enables the installer to manage, program and control automation systems, also remotely, simply and safely, with significant savings in time.
See pages 140/141

Nice PopKit

Solemyo 24V

P7024 + PP7224

ON2

MOF

ML24T

The kit contains:

PP7024 + PP7224 2 surface-mounted electromechanical gear motors, PP7024 (with incorporated control unit and OXI plug-in receiver), PP7224 (without control unit). **ON2** 1 transmitter 433.92 MHz, 2 channels. **MOF** 1 pair of photocells for outdoor installation. **ML24T** 1 flashing light with integrated aerial.

For swing gates with leaves up to 2 m, ideal for large posts and lightweight structures with articulated arm.

Sophisticated electronics: slowdown, obstacle detection system, can be linked to the 8.2 KOhm resistive sensitive edge.

User-friendly: release with personalised Nice key designed for cord-type release.

Sturdy, aluminium, anti-shearing arm.

Powerful: thanks to the 180 Nm torque.

Always ready for use: continues to work even during power failures using optional (PS124) batteries that fit inside the gear motor.

Exclusive functions: photo-test, programmable input for functions such as open, close, photo2, open pedestrian and open partially.

Small shockproof body with aluminium base.

Code	Description	Pack/pallet
POPKCE	Kit for swing gates with leaves up to 2 m, with articulated arm	12

N.B. The content of the package may vary: consult the retailer.

Technical specifications

Code	PP7024	PP7224*
Electrical data		
Power supply (Vac 50/60 Hz)	230	-
Power supply (Vdc)	-	24
Absorption (A)	1	3
Power (W)	75	
Performance data		
Speed (Rpm)	1.68	
Torque (Nm)	180	
Work cycle (cycles/hour)	25	
Dimensional and general data		
Protection level (IP)	54	
Working temp. (°C Min/Max)	-20 ÷ +50	
Dimensions (mm)	167x254x315 h	
Weight (kg)	10	

* Version without control unit.

Utilisation limits

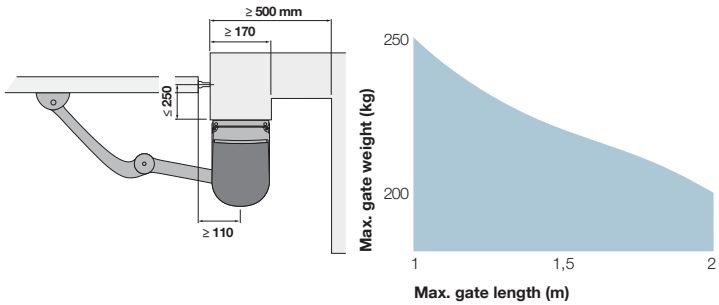

The shape, the height of the gate and the weather conditions can considerably reduce the values shown in the graph to the side.

Nice recommends customers order products in pallets in order to facilitate storage and delivery, and ensure packs are uniform. The number of packs per single pallet has been specified for this reason. Approximate draft.

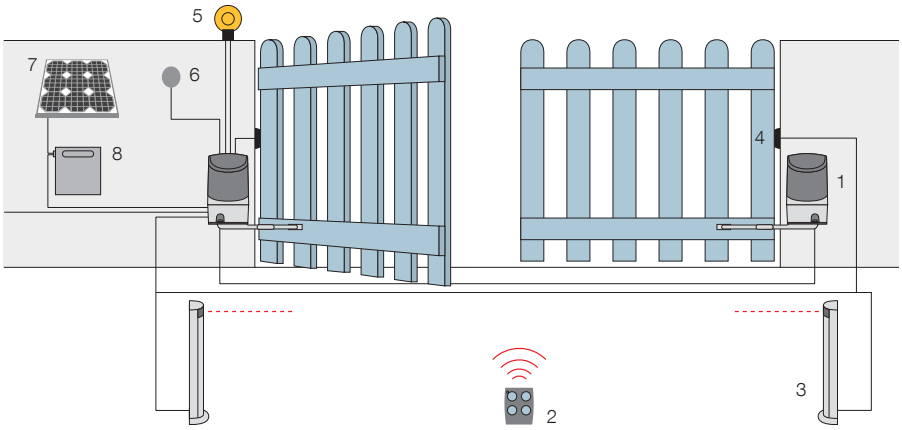

1. Pop **2.** Transmitter **3.** Photocells mounted on posts **4.** Photocells **5.** Flashing light **6.** Digital or key switches **7.** SYP* solar panel **8.** PSY24* battery box.

*Optional connection to Solemyo system.

Accessories

POA1
Spare control unit for PP7024.

PS124
24 V battery with integrated battery charger.

Pc/pack 1

PLA10
Vertical 12 V electric lock (required for gates longer than 3 m).

Pc/pack 1

PLA11
Horizontal 12 V electric lock (required for gates longer than 3 m).

Pc/pack 1

KIO
Key-operated selector switch for low voltage contacts, with release mechanism for metal cord.

Pc/pack 1

KA1
6 m cable release kit for KIO.

Pc/pack 1

TS
Signboard.

Pc/pack 1

Solemyo system

The solar power kit Solemyo to automate gates, garage doors or barrier gates, including those located far from the power mains and without the need for costly and invasive excavation work.
See pages 186/187

Nice PopKit 7124

Sole myo | Opera | Blue BUS | 24V

PP7124 + PP7224

ON2

MOFB

MLBT

The kit contains:

PP7124 + PP7224 2 surface-mounted electromechanical gear motors, PP7124 (with built-in control unit and OXI plug-in receiver), PP7224 (without control unit). **ON2** 1 transmitter 433.92 MHz, 2 channels.
MOFB 1 couple of external photocells designed for connection by Nice BlueBUS.
MLBT 1 flashing light with integrated aerial.

Code	Description	Pack/pallet
POP7124KCE	Kit for swing gates with leaves up to 2 m, 24 Vdc, surface mounted	12

N.B. The content of the package may vary: consult the retailer.

For swing gates with leaves up to 2 m, ideal for large posts and lightweight structures.

Irreversible electromechanical 24 Vdc gear motor with articulated arm, surface mounted. Intensive use.

Resistant and compact: 167 mm in width, ideal for any kind of post. Small shockproof body with aluminium base.

Energy saving, respect for the environment, autonomy: 3 standby modes to reduce mains consumption, or battery power consumption if connected to the Solemyo kit.

Powerful: thanks to the 250 Nm torque.

Sturdy, aluminium, anti-shearing arm.

No blackout: with the optional batteries (PS124) housed inside the gear motor.

User friendly: release with personalized Nice key, designed for cord-type release.

Easy to install: no welding.

Built-in control unit equipped (PP7124) with Nice BlueBUS technology and compatible for operation with Opera and Solemyo.
Just 3 keys to facilitate programming:

- deceleration on opening and closing;
- obstacle detection system, can be linked to the 8.2 KOhm resistive sensitive edge, fototest;
- easy option of connecting additional pairs of photocells, foto2 (for PP7124);
- automatic memorization of limit switches on opening and closing with self-learning function;
- programming of pause time;
- pedestrian open and partial open.

Everything under control: thanks to the **provision for operation with the Opera BUS T4 system, the O-View** control unit can be used to expand the options for programming, control and diagnostics of the automation, both on site and remotely.

Technical specifications

Code	PP7124	PP7224*
Electrical data		
Power supply (Vac 50/60 Hz)	230	-
Power supply (Vdc)	-	24
Absorption (A)	1.3	4*
Power (W)	280	100*
Performance data		
Speed (Rpm)	1.68	
Torque (Nm)	250	250*
Work cycle (cycles/hour)	35	35*
Dimensional and general data		
Protection level (IP)	44	
Working temp. (°C Min/Max)	-20 ÷ +50	
Dimensions (mm)	167x254x315 h	
Weight (kg)	10	9

* Version without control unit, only if associated with PP7124

Utilisation limits

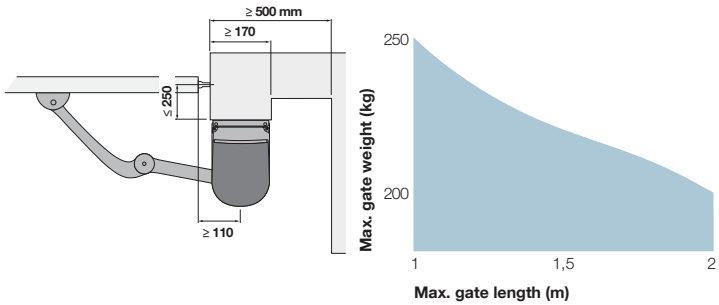

The shape, the height of the gate and the weather conditions can considerably reduce the values shown in the graph to the side.

Nice recommends customers order products in pallets in order to facilitate storage and delivery, and ensure packs are uniform. The number of packs per single pallet has been specified for this reason. Approximate draft.

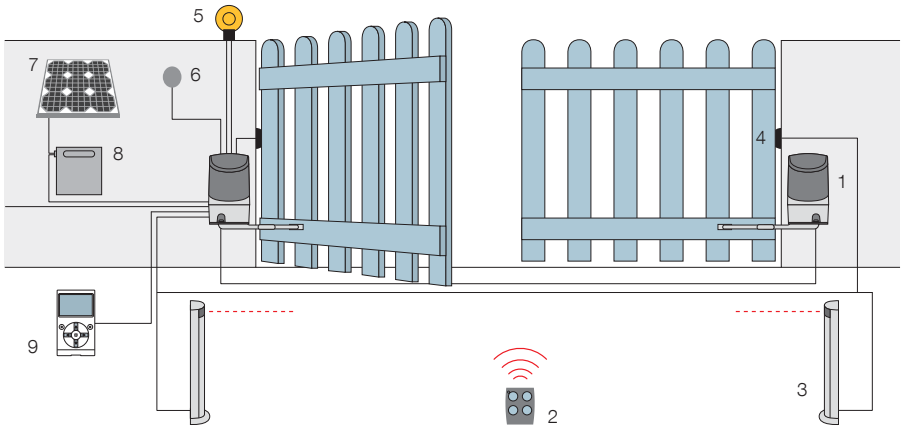

1. Pop **2.** Transmitter **3.** Photocells mounted on posts **4.** Photocells **5.** Flashing light **6.** Digital or key switches **7.** SYP* solar panel **8.** PSY24* battery box. **9.** O-View* multifunction display.

*Optional connection to Solemyo and Opera systems.

Accessories

POA3
Spare control unit for PP7124.

PS124
24 V battery with integrated battery charger.

Pc/pack 1

PLA10
Vertical 12 V electric lock (required for gates longer than 3 m).

Pc/pack 1

PLA11
Horizontal 12 V electric lock (required for gates longer than 3 m).

Pc/pack 1

KIO
Key-operated selector switch for low voltage contacts, with release mechanism for metal cord.

Pc/pack 1

KA1
6 m cable release kit for KIO.

Pc/pack 1

TS
Signboard.

Pc/pack 1

Solemyo system

The solar power kit Solemyo to automate gates, garage doors or barrier gates, including those located far from the power mains and without the need for costly and invasive excavation work.
See pages 186/187

Opera system

The innovative Opera system enables the installer to manage, program and control automation systems, also remotely, simply and safely, with significant savings in time.
See pages 140/141

NEW Sole myo Opera Blue BUS 24V

Code	Description	Pack/pallet
HO7124	Irreversible 24 Vdc, complete with articulated arm and built-in control unit	12
HO7224	Irreversible 24 Vdc, complete with articulated arm without control unit	12

N.B. The content of the package may vary: consult the retailer.

For swing gates with leaves up to 2.4 m, ideal for large columns.

Irreversible electromechanical 24 Vdc gear motor with articulated arm, surface mounted.
Ideal for intensive use.

Two irreversible 24 Vdc with micrometric adjustment mechanical stops on opening and closing: with built-in control unit (HO7124) and without control unit (HO7224).

Powerful thanks to the 250 Nm torque.

Resistant and compact: 180 mm in width, ideal for any kind of post. Small shockproof body with aluminium base.

Sturdy, aluminium anti-shearing arm.

Easy to install: thanks to the new fixing bracket with quick connector for the motor. No welding.

Sophisticated electronics with the built-in control unit, just 3 keys to manage all programming operations:

- obstacle detection and possibility of connecting to 8.2 KOhm sensitive edge, fototest;
- automatic fault diagnostics;
- memorisation of opening and closing travel limits in self-learning mode;
- possibility of configuring the stop input in self-learning mode, NO, NC and the latest generation 8.2 KOhm resistive sensitive edges:
- deceleration on opening and closing;
- simple connection of pairs of additional photocells, foto2;
- programming of pause time;
- pedestrian open and partial open;
- clutch with anti-crushing safety mechanism.

Energy saving with no black outs:
3 standby modes to reduce mains consumption, or battery power consumption if connected to the Solemyo kit.
Operation in the event of a power failure thanks to the optional batteries (PS124).

Everything under control: thanks to compatibility for operation with Opera system BUS T4, the unit can be used to expand the options of programming, control and diagnostics of the automation on site and remotely.

Technical specifications

Code	HO7124	HO7224
Electrical data		
Power supply (Vac 50/60 Hz)	230	-
Power supply (Vdc)	-	24
Absorption (A)	1.3	4
Power (W)	280	100
Performance data		
Speed (Rpm)	1.68	
Torque (Nm)	250	
Work cycle (cycles/hour)	35	
Dimensional and general data		
Protection level (IP)	54	
Working temp. (°C Min/Max)	-20 ÷ +50	
Dimensions (mm)	252x180x290 h	
Weight (kg)	9	6.5

* Version without control unit, only if associated with PP7124

Utilisation limits

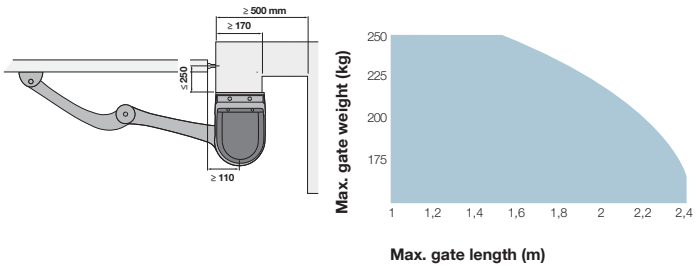

The shape, the height of the gate and the weather conditions can considerably reduce the values shown in the graph to the side.

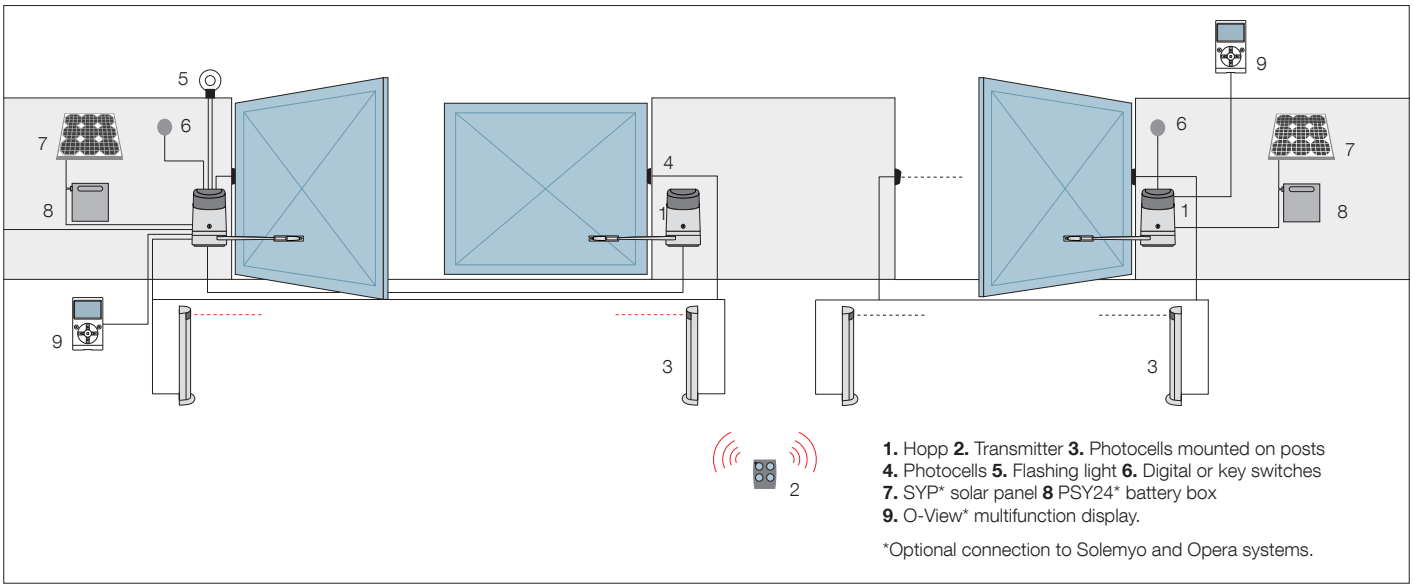

1. Hopp **2.** Transmitter **3.** Photocells mounted on posts
4. Photocells **5.** Flashing light **6.** Digital or key switches
7. SYP* solar panel **8** PSY24* battery box
9. O-View* multifunction display.

*Optional connection to Solemyo and Opera systems.

Accessories

POA3
Spare control unit for HO7174.

PS124
24 V battery with integrated battery charger.

Pc/pack 1

PLA10
Vertical 12 V electric lock (required for gates longer than 3 m).

Pc/pack 1

PLA11
Horizontal 12 V electric lock (required for gates longer than 3 m).

Pc/pack 1

KIO
Key-operated selector switch for low voltage contacts, with release mechanism for metal cord.

Pc/pack 1

KA1
6 m cable release kit for KIO.

Pc/pack 1

TS
Signboard.

Pc/pack 1

Solemyo system

The solar power kit Solemyo to automate gates, garage doors or barrier gates, including those located far from the power mains and without the need for costly and invasive excavation work.
See pages 186/187

Opera system

The innovative Opera system enables the installer to manage, program and control automation systems, also remotely, simply and safely, with significant savings in time.
See pages 140/141

Nice recommends customers order products in pallets in order to facilitate storage and delivery, and ensure packs are uniform. The number of packs per single pallet has been specified for this reason. Approximate draft.

Nice HoppKit

NEW | Sole myo | Opera | Blue BUS | 24V

HO7124 + HO7224

ON2

MOFB

MLBT

The kit contains:

HO7124 + HO7224, 2 surface-mounted electromechanical gear motors: HO7124 (with control unit and OXI plug-in receiver), HO7224 (without control unit). **ON2** 1 transmitter 433.92 MHz, 2 channels. **MOFB** 1 couple of external photocells designed for connection by Nice BlueBUS. **MLBT** 1 flashing light with integrated aerial.

Code	Description	Pack/pallet
HOPPKCE	Kit for the automation of swing gates with leaves up to 2,4 m, 24 Vdc, externally mounted	12

N.B. The content of the package may vary: consult the retailer.

For swing gates with leaves up to 2.4 m, ideal for large columns.

Irreversible electromechanical 24 Vdc gear motor with articulated arm, surface mounted.
Ideal for intensive use.

Two irreversible 24 Vdc with micrometric adjustment mechanical stops on opening and closing: with built-in control unit (HO7124) and without control unit (HO7224).

Powerful thanks to the 250 Nm torque.

Resistant and compact: 180 mm in width, ideal for any kind of post. Small shockproof body with aluminium base.

Sturdy, aluminium anti-shearing arm.

Easy to install: thanks to the new fixing bracket with quick connector for the motor. No welding.

Sophisticated electronics with the built-in control unit, just 3 keys to manage all programming operations:

- obstacle detection and possibility of connecting to 8.2 KOhm sensitive edge, fototest;
- automatic fault diagnostics;
- memorisation of opening and closing travel limits in self-learning mode;
- possibility of configuring the stop input in self-learning mode, NO, NC and the latest generation 8.2 KOhm resistive sensitive edges:
- deceleration on opening and closing;
- simple connection of pairs of additional photocells, foto2;
- programming of pause time;
- pedestrian open and partial open;
- clutch with anti-crushing safety mechanism.

Energy saving with no black outs:
3 standby modes to reduce mains consumption, or battery power consumption if connected to the Solemyo kit.
Operation in the event of a power failure thanks to the optional batteries (PS124).

Everything under control: thanks to compatibility for operation with Opera system BUS T4, the unit can be used to expand the options of programming, control and diagnostics of the automation on site and remotely.

Technical specifications

Code	HO7124	HO7224
Electrical data		
Power supply (Vac 50/60 Hz)	230	-
Power supply (Vdc)	-	24
Absorption (A)	1.3	4
Power (W)	280	100
Performance data		
Speed (Rpm)	1.68	
Torque (Nm)	250	
Work cycle (cycles/hour)	35	
Dimensional and general data		
Protection level (IP)	54	
Working temp. (°C Min/Max)	-20 ÷ +50	
Dimensions (mm)	252x180x290 h	
Weight (kg)	9	6.5

* Version without control unit, only if associated with PP7124

Utilisation limits

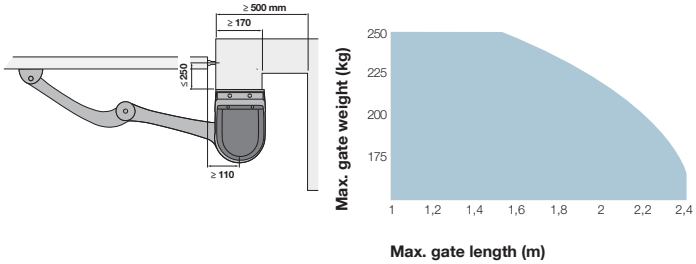

The shape, the height of the gate and the weather conditions can considerably reduce the values shown in the graph to the side.

Nice recommends customers order products in pallets in order to facilitate storage and delivery, and ensure packs are uniform. The number of packs per single pallet has been specified for this reason. Approximate draft.

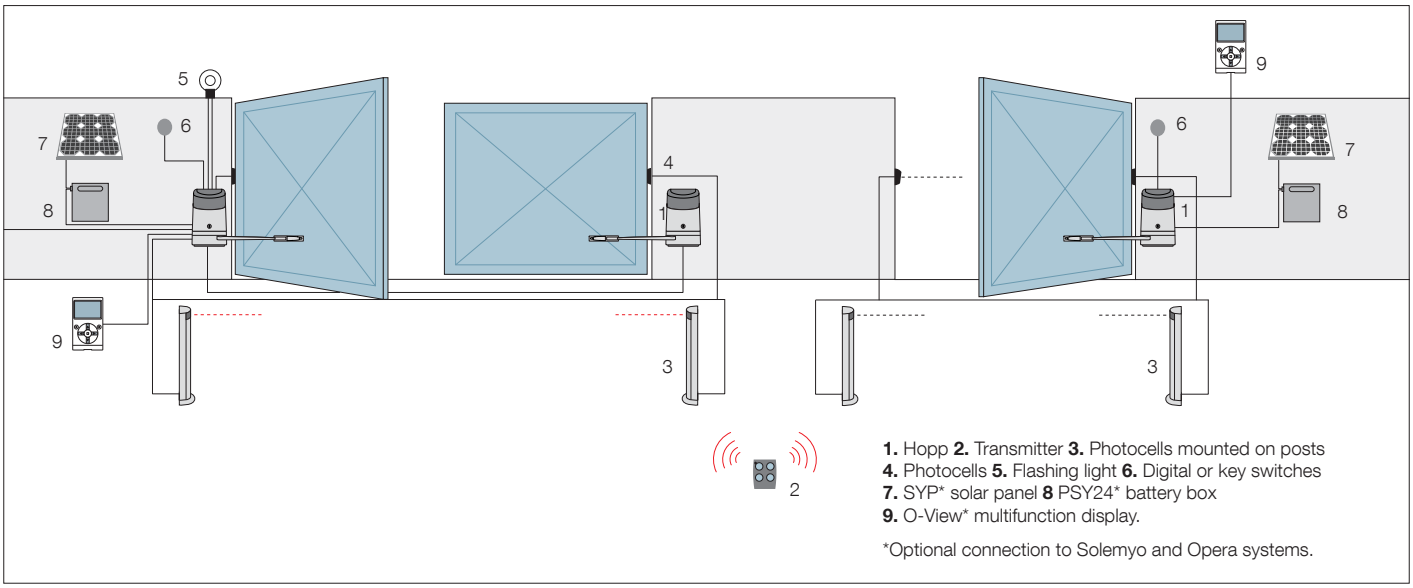

1. Hopp **2.** Transmitter **3.** Photocells mounted on posts
4. Photocells **5.** Flashing light **6.** Digital or key switches
7. SYP* solar panel **8** PSY24* battery box
9. O-View* multifunction display.

*Optional connection to Solemyo and Opera systems.

Accessories

POA3
Spare control unit for HO7174.

PS124
24 V battery with integrated battery charger.

Pc/pack 1

PLA10
Vertical 12 V electric lock (required for gates longer than 3 m).

Pc/pack 1

PLA11
Horizontal 12 V electric lock (required for gates longer than 3 m).

Pc/pack 1

KIO
Key-operated selector switch for low voltage contacts, with release mechanism for metal cord.

Pc/pack 1

KA1
6 m cable release kit for KIO.

Pc/pack 1

TS
Signboard.

Pc/pack 1

Solemyo system

The solar power kit Solemyo to automate gates, garage doors or barrier gates, including those located far from the power mains and without the need for costly and invasive excavation work.
See pages 186/187

Opera system

The innovative Opera system enables the installer to manage, program and control automation systems, also remotely, simply and safely, with significant savings in time.
See pages 140/141

Nice Hyke

Code	Description	Pack/pallet
HK7024	Irreversible 24 Vdc, complete with articulated arm and built-in control unit	12
HK7224	Irreversible 24 Vdc, complete with articulated arm without control unit	12

For swing gates with leaves up to 3.5 m, ideal for large columns.
Irreversible electromechanical 24 Vdc gearmotor with articulated arm, surface mounted.
Ideal for intensive use.

Reliable, durability thanks to the housing in aluminium with polyester paint finish, resistant to atmospheric agents.

Ultra-powerful and delicate: thanks to the torque of 500 Nm and encoder technology, for millimetric precision and reliability. Safety in movement with dual technology obstacle detection.

Two irreversible 24 Vdc versions with limit switches on opening and closing: with built-in control unit (HK7024) and without control unit (HK7224).

Practical and quick installation: the articulated arm is adjustable in length for maximum flexibility.

Simple and precise limit switch adjustment: mechanical stops and micrometric adjustment screws.

Easy to operate release lever, with metal lock and personalised Nice key.
With provision for cable control.

Savings, respect for the environment, and autonomy: when connected to the buffer battery or Solemyo kit, consumption on standby is just 0.1 W.

No black out: with the optional batteries (PS124) housed inside the gear motor.

Built-in control unit (HK7024):
- simple programming via a single key;
- self-learning of opening and closing limit positions;
- automatic fault diagnostics;
- pause time programming;
- pass door;
- deceleration on opening and closing;
- obstacle detection with dual technology;
- provision for connection of latest generation sensitive edges.

Technical specifications

Code	HK7024	HK7224
Electrical data		
Power supply (Vac 50/60 Hz)	230	-
Power supply (Vdc)	-	24
Absorption (A)	1.5	6
Power (W)	300	140
Performance data		
Speed (Rpm)	2.25	
Torque (Nm)	500	
Work cycle (cycles/hour)	40	
Dimensional and general data		
Protection level (IP)	54	
Working temp. (°C Min/Max)	-20 ÷ +50	
Dimensions (mm)	290x210x320 h	
Weight (kg)	10.5	9.5

Utilisation limits

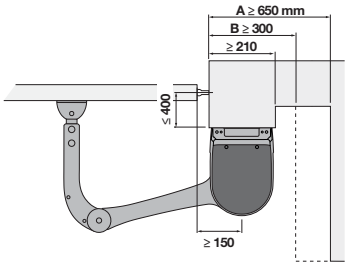

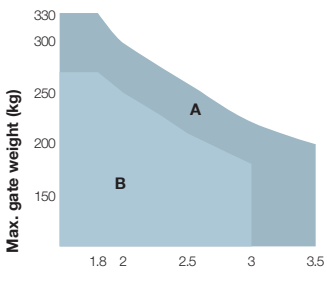

A Entire arm
B Reduced arm

The shape, the height of the gateand the weather conditions can considerably reduce the values shown in the graph to the side.

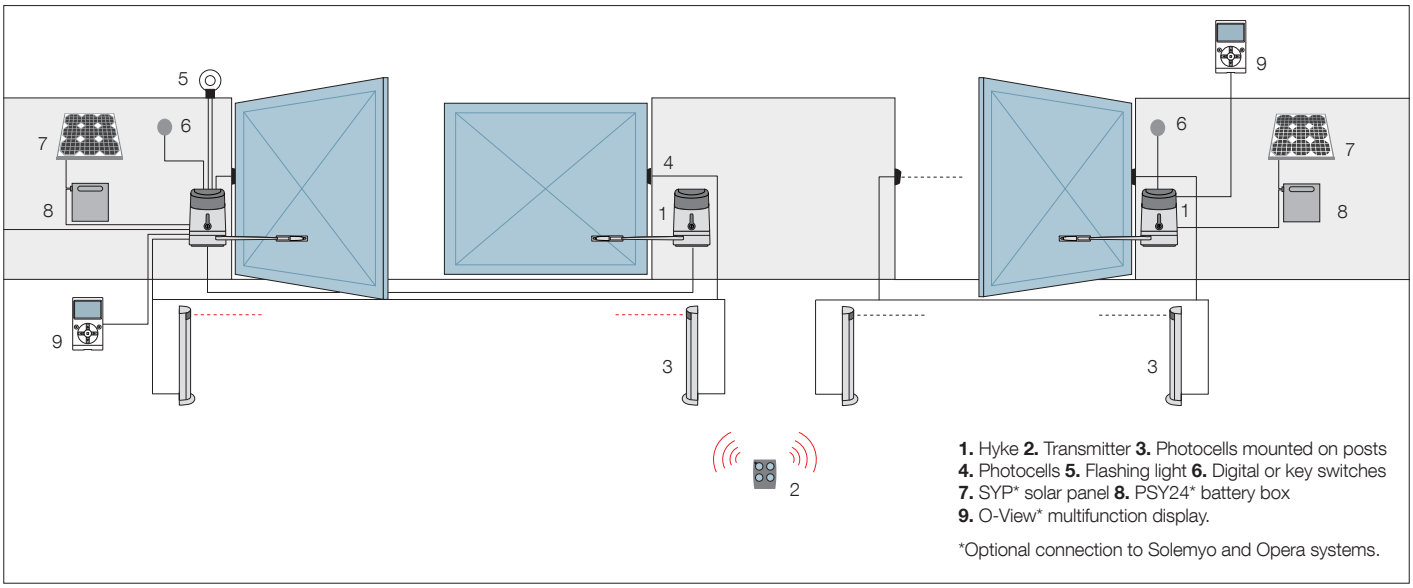

1. Hyke **2.** Transmitter **3.** Photocells mounted on posts
4. Photocells **5.** Flashing light **6.** Digital or key switches
7. SYP* solar panel **8.** PSY24* battery box
9. O-View* multifunction display.

*Optional connection to Solemyo and Opera systems.

Accessories

HKA1
Spare control unit for HK7024.

PS124
24 V battery with integrated battery charger.

Pc/pack 1

PLA10
Vertical 12 V electric lock (required for gates longer than 3 m).

Pc/pack 1

PLA11
Horizontal 12 V electric lock (required for gates longer than 3 m).

Pc/pack 1

KIO
Key-operated selector switch for low voltage contacts, with release mechanism for metal cord.

Pc/pack 1

KA1
6 m cable release kit for KIO.

Pc/pack 1

TS
Signboard.

Pc/pack 1

Solemyo system

The solar power kit Solemyo to automate gates, garage doors or barrier gates, including those located far from the power mains and without the need for costly and invasive excavation work.
See pages 186/187

Opera system

The innovative Opera system enables the installer to manage, program and control automation systems, also remotely, simply and safely, with significant savings in time.
See pages 140/141

Nice recommends customers order products in pallets in order to facilitate storage and delivery, and ensure packs are uniform. The number of packs per single pallet has been specified for this reason. Approximate draft.

Nice HykeKit

Sole myo | Opera | Blue BUS | 24V

HK7024 + HK7224

ON2

MOFB

MLBT

The kit contains:

HK7024 + HK7224 electromechanical gear motors for external mounting. HK7024 (with control unit and snap-fit receiver OXI), HK7224 (without control unit). **ON2** 1 two-channel 433.92 MHz transmitter.
MOFB 1 pair of external photocells with provision for connection via Nice BlueBUS.
MLBT 1 flashing light with integrated aerial.

Code	Description	Pack/pallet
HYKEKCE	Kit for the automation of swing gates with leaves up to 3.5 m, 24 Vdc, with articulated arm, externally mounted	12

N.B. The content of the package may vary: consult the retailer.

For swing gates with leaves up to 3.5 m, ideal for large columns.

Irreversible electromechanical 24 Vdc gear motor with articulated arm, surface mounted.
Ideal for intensive use.

New third generation model: quality and durability thanks to the housing in aluminium with polyester paint finish, resistant to atmospheric agents.

Ultra-powerful and delicate: thanks to the torque of 500 Nm and encoder technology, for millimetric precision and reliability. Safety in movement with dual technology obstacle detection.

Two irreversible 24 Vdc versions with limit switches on opening and closing: with built-in control unit (HK7024) and without control unit (HK7224).

Practical and quick installation: the articulated arm is adjustable in length for maximum flexibility.

Simple and precise limit switch adjustment: mechanical stops and micrometric adjustment screws.

Easy to operate release lever, with metal lock and personalised Nice key.
With provision for cable control.

Savings, respect for the environment, and autonomy: when connected to the buffer battery or Solemyo kit, consumption on standby is just 0.1 W.

No black out: with the optional batteries (PS124) housed inside the gear motor.

Built-in control unit (HK7024):
- simple programming via a single key;
- self-learning of opening and closing limit positions;
- automatic fault diagnostics;
- pause time programming;
- pass door;
- deceleration on opening and closing;
- obstacle detection with dual technology;
- provision for connection of latest generation sensitive edges.

Technical specifications

Code	HK7024	HK7224
Electrical data		
Power supply (Vac 50/60 Hz)	230	-
Power supply (Vdc)	-	24
Absorption (A)	1.5	6
Power (W)	300	140
Performance data		
Speed (Rpm)	2.25	
Torque (Nm)	500	
Work cycle (cycles/hour)	40	
Dimensional and general data		
Protection level (IP)	54	
Working temp. (°C Min/Max)	-20 ÷ +50	
Dimensions (mm)	290x210x320 h	
Weight (kg)	10.5	9.5

Utilisation limits

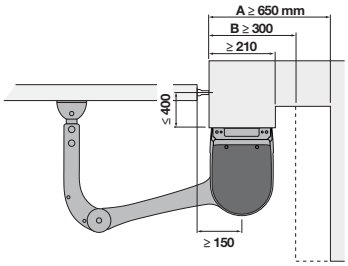

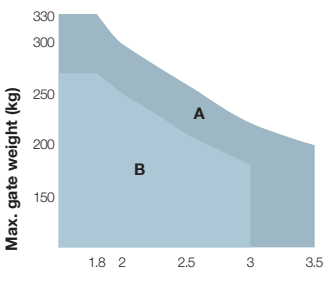

A Entire arm
B Reduced arm

The shape, the height of the gateand the weather conditions can considerably reduce the values shown in the graph to the side.

Nice recommends customers order products in pallets in order to facilitate storage and delivery, and ensure packs are uniform. The number of packs per single pallet has been specified for this reason. Approximate draft.

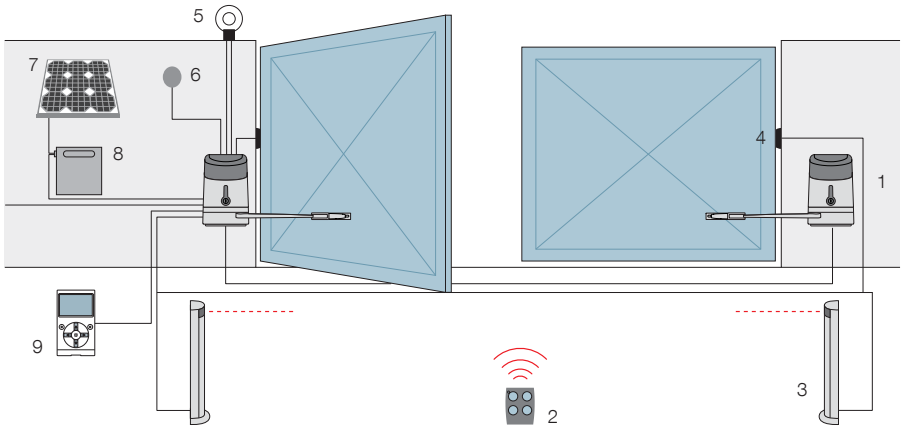

1. Hyke **2.** Transmitter **3.** Photocells mounted on posts **4.** Photocells **5.** Flashing light **6.** Digital or key switches **7.** SYP* solar panel **8.** PSY24* battery box **9.** O-View* multifunction display.

*Optional connection to Solemyo and Opera systems.

Accessories

HKA1
Spare control unit for HK7024.

PS124
24 V battery with integrated battery charger.

Pc/pack 1

PLA10
Vertical 12 V electric lock (required for gates longer than 3 m).

Pc/pack 1

PLA11
Horizontal 12 V electric lock (required for gates longer than 3 m).

Pc/pack 1

KIO
Key-operated selector switch for low voltage contacts, with release mechanism for metal cord.

Pc/pack 1

KA1
6 m cable release kit for KIO.

Pc/pack 1

TS
Signboard.

Pc/pack 1

Solemyo system

The solar power kit Solemyo to automate gates, garage doors or barrier gates, including those located far from the power mains and without the need for costly and invasive excavation work.
See pages 186/187

Opera system

The innovative Opera system enables the installer to manage, program and control automation systems, also remotely, simply and safely, with significant savings in time.
See pages 140/141

Nice Hyppo 7000

Sole myo | Opera | Blue BUS | 24V | 230V

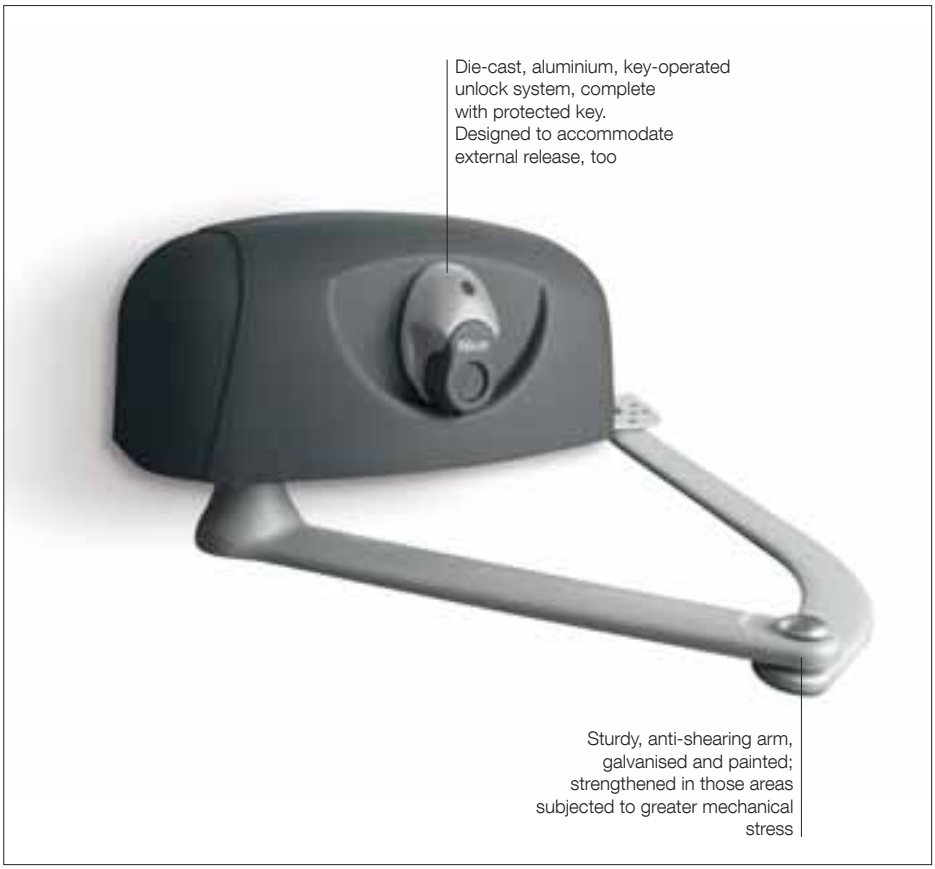

For swing gates with leaves up to 3 m, also ideal for large pillars.
Electromechanical gear motor, surface mounted, also in 24 Vdc version with magnetic encoder, with articulated arm.

Single model for right and left leaves.
Two irreversible versions, with 230 Vac (HY7005) and 24 Vdc (HY7024) power supplies with magnetic encoder.

Fewer connections mean **quicker installation.**

Pre-wired, incorporated double limit-switch both during opening and closing (HY7005).

Easy and quick to install: thanks to fewer connections and nothing welded to the gates.

Long-lasting: solid metal mechanics.

Compact: shockproof bodywork with no sharp corners.

Recommended control units:
Mindy A3, A3F, A6, A6F, A60, A700F;
for HY7024 Moonclever MC824H.

24 Vdc version with magnetic encoder.
Perfect for intensive use, compatible with the control unit Moonclever MC824H:
- simple programming, by means of a single key;
- self-learning of opening and closing limit positions;
- automatic fault diagnostics;
- programming of pause time;
- pedestrian pass door;
- deceleration on opening and closing;
- obstacle detection with dual technology;
- operation in event of power failure by means of optional rechargeable batteries (PS324);
- provision for connection of latest generation resistive sensitive edges.

Code	Description	Pack/pallet
HY7024	Irreversible, 24 Vdc, with magnetic encoder, with shear-proof articulated arm, galvanized and painted	16
HY7005	Irreversible, 230 Vac, with sturdy articulated shear-proof arm, galvanized and painted, with limit switch on opening and closing	16

Technical specifications

Code	HY7024	HY7005
Electrical data		
Power supply (Vac 50 Hz)*	-	230
Power supply (Vdc)	24	-
Absorption (A)	5	1.2
Power (W)	120	250
Performance data		
Speed (Rpm)	2	1.7
Torque (Nm)	250	400
Work cycle (%)	80	30
Dimensional and general data		
Protection level (IP)	43	
Working temp. (°C Min/Max)	-20 ÷ +50	
Dimensions (mm)	350x165x242 h	
Weight (kg)	13	

*60 Hz version available on request.

Utilisation limits

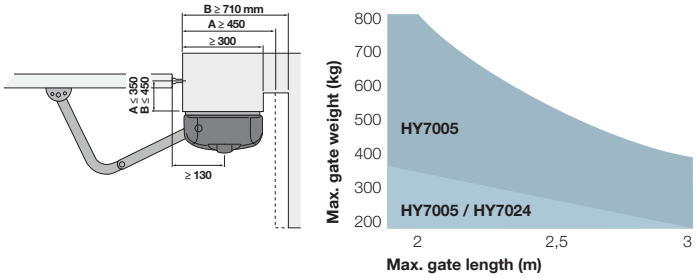

A Standard arm
B Arm with accessory HYA12

N.B. The above values are valid if the motor is used with standard accessories.
The shape, the height of the gate and the weather conditions can considerably reduce the values shown in the graph to the side.
Use in windy areas 230 Vac models.

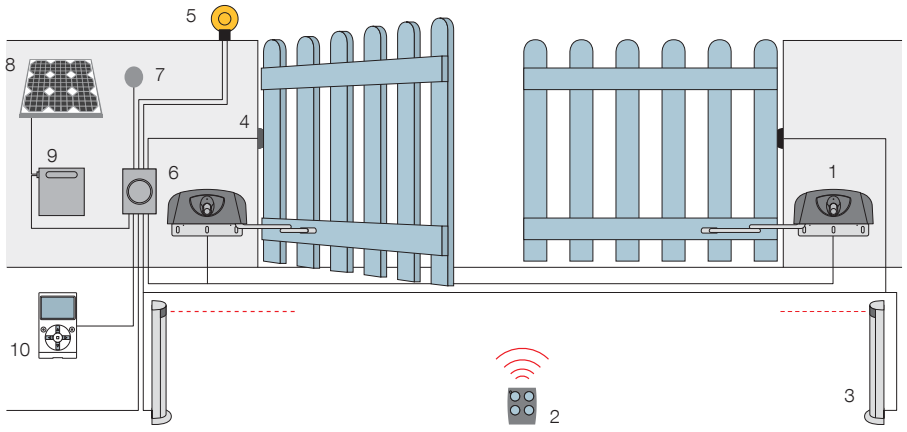

1. Hyppo **2.** Transmitter **3.** Photocells mounted on posts **4.** Photocells **5.** Flashing light **6.** Control unit **7.** Digital or key switches **8.** SYP* solar panel **9.** PSY24* battery box **10.** O-View* multifunction display.

*Optional connection to Solemyo and Opera systems.

Accessories

HYA12
Longer articulated arm (see the layout).

Pc/pack 1

PLA10
Vertical 12 V electric lock (required for gates longer than 3 m).

Pc/pack 1

PLA11
Horizontal 12 V electric lock (required for gates longer than 3 m).

Pc/pack 1

KIO
Key-operated selector switch for low voltage contacts, with release mechanism for metal cord.

Pc/pack 1

KA1
6 m cable release kit for KIO.

Pc/pack 1

TS
Signboard.

Pc/pack 1

Accessory

For 24 Vdc version

PS324
24 V battery with integrated battery charger.

Pc/pack 1

Solemyo system

The solar power kit Solemyo to automate gates, garage doors or barrier gates, including those located far from the power mains and without the need for costly and invasive excavation work.
See pages 186/187

Opera system

The innovative Opera system enables the installer to manage, program and control automation systems, also remotely, simply and safely, with significant savings in time.
See pages 140/141

Nice recommends customers order products in pallets in order to facilitate storage and delivery, and ensure packs are uniform. The number of packs per single pallet has been specified for this reason. Approximate draft.

Nice X-Metro

For swing gates with leaves up to 2.3 m, underground installation, ultra compact.
Irreversible electromechanical 24 Vdc gear motor, ideal for intensive use.

Sturdy and discreet: compact foundation box with a height of only 81 mm. Steel with cataphoresis paint finish guarantees optimal resistance to corrosion, and thickness of 2.5 mm guarantees strength. All this in just 52 mm of protrusion from the ground.

Practical and quick installation thanks to the exit lever on the gear motor attached directly on the leaf.

Opening up to 180° as standard.

Reliable and sturdy: the gear motor, in IP67 pressure die cast aluminium, suspended inside the housing to enable drainage of any deposits, ensures optimal water resistance.

Load-bearing foundation box with adjustable mechanical stops on opening and closing: the gear motor can also be installed later as required.

Practical release easy to operate from inside and outside, acting directly on the gear motor, easy to operate by means of the special key.

XME2024, compatible with the control unit Moonclever MC424L, and for operation with Solemyo systems:
- simple programming via a single key;
- memorisation of opening and closing limit positions in self-learning mode;
- pause time programming;
- pass door;
- deceleration on opening and closing;
- obstacle detection;
- provision for connection of latest generation sensitive edges;
- operation in event of power failure by means of optional rechargeable batteries (PS124) with compartment in control unit.

XME2124 with magnetic encoder, compatible with control unit Moonclever MC824H, with BlueBUS technology, and compatible for operation with Solemyo and Opera systems:
- simple programming via a single key;
- self-learning of opening and and closing limit positions;
- automatic fault diagnostics;
- with output for courtesy light and maintenance indicator;
- speed settings on 5 levels;
- separate and configurable inputs for Step by Step, Open and Close;
- pause time programming;
- pass door;
- deceleration on opening and closing;
- obstacle detection with dual technology;
- provision for connection of latest generation sensitive edges;
- operation in event of power failure by means of optional rechargeable batteries (PS324) with compartment in control unit.

Code	Description	Pack/pallet
XME2024	Irreversible, 24 Vdc	18
XME2124	Irreversible 24 Vdc version with magnetic encoder	18
XMBOX	Externally foundation box, with cataphoresis paint finish. Complete with leaf coupling lever and mechanical stops on opening and closing	18

Technical specifications

Code	XME2024	XME2124
Electrical data		
Power supply (Vdc)	24	
Absorption (A)	5	
Power (W)	120	
Performance data		
Speed (Rpm)	1.25	
Torque (Nm)	250	
Work cycle (cycles/hour)	60	
Dimensional and general data		
Protection level (IP)	67	
Working temp. (°C Min/Max)	-20° ÷ +50°	
Dimensions (mm)	235x206x96.5 h	
Weight (kg)	6	

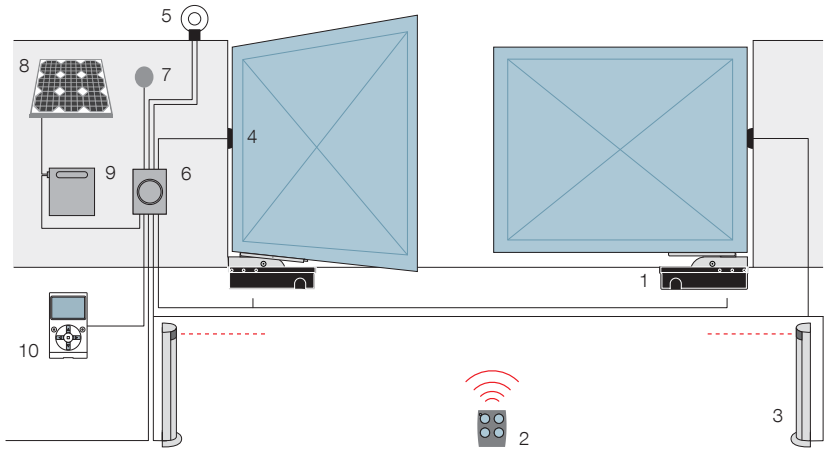

1. X-Metro **2.** Transmitter **3.** Photocells mounted on posts **4.** Photocells **5.** Flashing light
6. Control unit **7.** Digital or key switches
8. SYP* solar panel **9.** PSY24* battery box.
10. O-View* multifunction display.

*Optional connection to Solemyo and Opera systems.

Accessories

PS124
24 V battery with integrated battery charger for MC424L.

Pc/pack 1

PS324
24 V battery with integrated battery charger for MC824H.

Pc/pack 1

PLA10
Vertical 12 V electric lock (required for gates longer than 3 m).

Pc/pack 1

PLA11
Horizontal 12 V electric lock (required for gates longer than 3 m).

Pc/pack 1

TS
Signboard.

Pc/pack 1

Utilisation limits

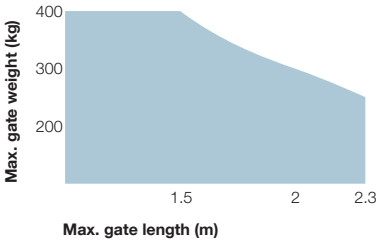

The shape, the height of the gate and the weather conditions can considerably reduce the values shown in the graph to the side.

Solemyo system

The solar power kit Solemyo to automate gates, garage doors or barrier gates, including those located far from the power mains and without the need for costly and invasive excavation work.
See pages 186/187

Opera system

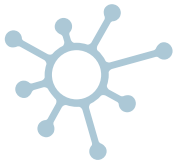

The innovative Opera system enables the installer to manage, program and control automation systems, also remotely, simply and safely, with significant savings in time.
See pages 140/141

Nice recommends customers order products in pallets in order to facilitate storage and delivery, and ensure packs are uniform. The number of packs per single pallet has been specified for this reason. Approximate draft.

Nice X-MetroKit 2024

Sole myo 24V

XME2024

ON2

MC424L

MOF

MOSE

ML24T

TS

The kit contains:

XME2024 2 gear motors. **XMBOX** 2 foundation boxes. **ON2** 1 transmitter 433.92 MHz, 2 channels. **MC424L** 1 control unit with OXI plug-in receiver. **MOF** 1 pair of photocells for outdoor installation. **MOSE** 1 key selector switch for outdoor installation. **ML24T** 1 flashing light with integrated aerial. **TS** 1 signboard.

Code	Description	Pack/pallet
XMETRO2024KCE	Kit for swing gates with leaves up to 2.3 m, 24 Vdc, underground installation	12

N.B. The content of the package may vary: consult the retailer.

For swing gates with leaves up to 2.3 m, underground installation, ultra compact.

Irreversible electromechanical 24 Vdc gear motor.

Sturdy and discreet: compact foundation box with a height of only 81 mm. Steel with cataphoresis paint finish guarantees optimal resistance to corrosion, and thickness of 2.5 mm guarantees strength. All this in a protrusion of just 52 mm from the ground.

Practical and quick installation thanks to the exit lever on the gear motor attached directly on the leaf.

Mechanical limit switches adjustable on opening and closing.

Opening up to 180° as standard.

Reliable and sturdy: the gear motor, in IP67 pressure die cast aluminium, suspended inside the housing to enable drainage of any deposits, ensures optimal water resistance.

Practical release from inside and outside, acting directly on the gear motor, easy to operate by means of the special key.

Moonclever control unit MC424L:

- easy programming by pressing a single button;
- clutch with anti-crush safety feature;
- automatic memorization of limit switches on opening and closing with self-learning function;
- programming of pause time;
- pedestrian pass door;
- deceleration on opening and closing;
- obstacle detection;
- provision for connection of latest generation resistive sensitive edges;
- continues to work even during power failures using optional (PS124) batteries that fit inside the control unit.

Technical specifications

Code	XME2024
Electrical data	
Power supply (Vdc)	24
Absorption (A)	5
Power (W)	120
Performance data	
Speed (Rpm)	1.25
Torque (Nm)	250
Work cycle (cycles/hour)	60
Dimensional and general data	
Protection level (IP)	67
Working temp. (°C Min/Max)	-20° ÷ +50°
Dimensions (mm)	235x206x96.5 h
Weight (kg)	6

Utilisation limits

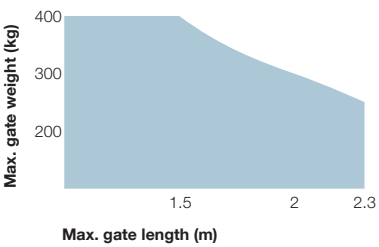

The shape, the height of the gate and the weather conditions can considerably reduce the values shown in the graph to the side.

Nice recommends customers order products in pallets in order to facilitate storage and delivery, and ensure packs are uniform. The number of packs per single pallet has been specified for this reason. Approximate draft.

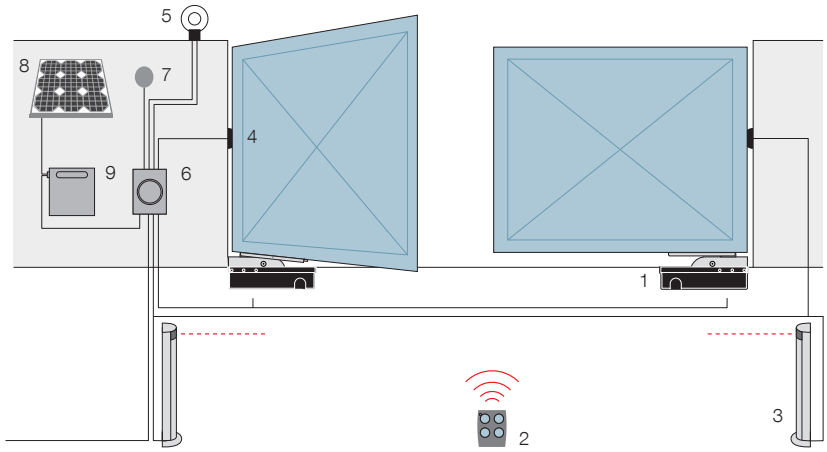

1. X-Metro **2.** Transmitter **3.** Photocells mounted on posts **4.** Photocells **5.** Flashing light **6.** Control unit **7.** Digital or key switches **8.** SYP* solar panel **9.** PSY24* battery box.

*Optional connection to Solemyo system.

Accessories

PS124
24 V battery with integrated battery charger.

Pc/pack 1

PLA10
Vertical 12 V electric lock (required for gates longer than 3 m).

Pc/pack 1

PLA11
Horizontal 12 V electric lock (required for gates longer than 3 m).

Pc/pack 1

Solemyo system

The solar power kit Solemyo to automate gates, garage doors or barrier gates, including those located far from the power mains and without the need for costly and invasive excavation work.
See pages 186/187

Nice X-MetroKit 2124

Sole myo | Opera | Blue BUS | 24V

XME2124

ON2

MC824H

MOFB

MOSE

MLBT

TS

The kit contains:

XME2124 2 gear motors. **XMBOX** 2 foundation boxes. **ON2** 1 transmitter 433.92 MHz, 2 channels. **MC824H** 1 control unit with OXI plug-in receiver. **MOFB** 1 couple of external photocells designed for connection by Nice BlueBUS. **MOSE** 1 key selector switch for outdoor installation. **MLBT** 1 flashing light with integrated aerial. **TS** 1 signboard.

Code	Description	Pack/pallet
XMETRO2124KCE	Kit for swing gates with leaves up to 2.3 m, 24 Vdc, underground installation	12

N.B. The content of the package may vary: consult the retailer.

For swing gates with leaves up to 2.3 m, underground installation, ultra compact.

Irreversible electromechanical gear motor 24 Vdc with magnetic encoder.

Sturdy and discreet: compact foundation box with a height of only 81 mm. Steel with cataphoresis paint finish guarantees optimal resistance to corrosion, and thickness of 2.5 mm guarantees strength. All this in a protrusion of just 52 mm from the ground.

Practical and quick installation thanks to the exit lever on the gear motor attached directly on the leaf.

Mechanical limit switches adjustable on opening and closing.

Opening up to 180° as standard.

Reliable and sturdy: the gear motor, in IP67 pressure die cast aluminium, suspended inside the housing to enable drainage of any deposits, ensures optimal water resistance.

Practical release from inside and outside, acting directly on the gear motor, easy to operate by means of the special key.

Control unit Moonclever MC824H, with BlueBUS technology, and compatible for operation with Solemyo and Opera systems:

- simple programming, by means of a single key;
- self-learning of opening and closing limit positions;
- automatic fault diagnostics;
- programming of pause time;
- pedestrian pass door;
- deceleration on opening and closing;
- obstacle detection with dual technology;
- operation in event of power failure by means of optional rechargeable batteries (PS324);
- provision for connection of latest generation resistive sensitive edges.

Technical specifications

Code	**XME2124**
Electrical data	
Power supply (Vdc)	24
Absorption (A)	5
Power (W)	120
Performance data	
Speed (Rpm)	1.25
Torque (Nm)	250
Work cycle (cycles/hour)	60
Dimensional and general data	
Protection level (IP)	67
Working temp. (°C Min/Max)	-20° ÷ +50°
Dimensions (mm)	235x206x96.5 h
Weight (kg)	6

Utilisation limits

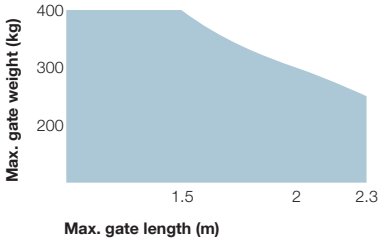

The shape, the height of the gate and the weather conditions can considerably reduce the values shown in the graph to the side.

Nice recommends customers order products in pallets in order to facilitate storage and delivery, and ensure packs are uniform. The number of packs per single pallet has been specified for this reason. Approximate draft.

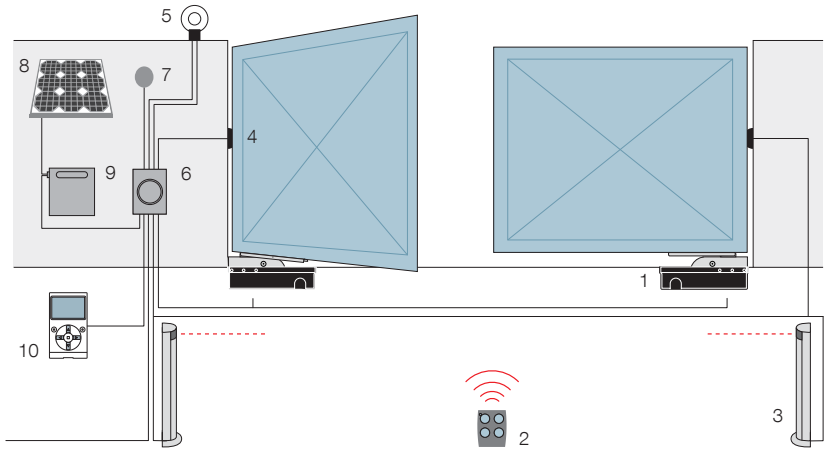

1. X-Metro **2.** Transmitter **3.** Photocells mounted on posts **4.** Photocells **5.** Flashing light **6.** Control unit **7.** Digital or key switches **8.** SYP* solar panel **9.** PSY24* battery box **10.** O-View* multifunction display.

*Optional connection to Solemyo and Opera systems.

Accessories

PS324
24 V battery with integrated battery charger.

Pc/pack 1

PLA10
Vertical 12 V electric lock (required for gates longer than 3 m).

Pc/pack 1

PLA11
Horizontal 12 V electric lock (required for gates longer than 3 m).

Pc/pack 1

Solemyo system

The solar power kit Solemyo to automate gates, garage doors or barrier gates, including those located far from the power mains and without the need for costly and invasive excavation work.
See pages 186/187

Opera system

The innovative Opera system enables the installer to manage, program and control automation systems, also remotely, simply and safely, with significant savings in time.
See pages 140/141

Nice Metroplex

Sole myo | Opera | Blue BUS | 24V | 230V

For swing gates with leaves up to 3.5 m, underground installation.

Irreversible electromechanical gear motor, also available in 24 Vdc versions with magnetic encoder.

An even more evolved range: 4 types of electromechanical gear motors irreversible **Metroplex**, also available in 24 Vdc version with magnetic encoder.
2 foundation boxes externally chamfered, Metro Box, with mechanical stop on opening: **in stainless steel** (MECX), ideal for use in extreme conditions, and with the **cataphoresis paint finish** (MECF), highly resistant to corrosion.

Reliable and resistant: motors made up of solid internal parts in metal. New IP67 waterproof die cast aluminium.

Total freedom of choice: release from inside and outside, two key-operated models or freely compatible lever version and easily activated with just one hand.

Simple to use: mechanical stop system on closure. Standard opening max. 110°, optional opening 360°.

Totally compatible with the previous Metro series.

Recommended control units:
Mindy A3, A3F, A6, A6F, A60, A700F; for ME3024 Moonclever MC824H.

24 Vdc version with magnetic encoder. Perfect for intensive use, compatible with the control unit Moonclever MC824H:
- simple programming, by means of a single key;
- self-learning of opening and closing limit positions;
- automatic fault diagnostics;
- programming of pause time;
- pedestrian pass door;
- deceleration on opening and closing;
- obstacle detection with dual technology;
- operation in event of power failure by means of optional rechargeable batteries (PS324);
- provision for connection of latest generation resistive sensitive edges.

Code	Description	Pack/pallet
ME3024	Irreversible, 24 Vdc, with magnetic encoder, complete with connecting lever and mechanical stop for the closing manoeuvre	18
ME3000	Irreversible, 230 Vac, high speed, grease lubrication, complete with connecting lever and mechanical stop for the closing manoeuvre	18
ME3000L	Irreversible, 230 Vac, low speed, grease lubrication, complete with connecting lever and mechanical stop for the closing manoeuvre	18
ME3010	Irreversible, 230 Vac, oil bath lubrication, complete with connecting lever and mechanical stop for the closing manoeuvre	18

Code	Description	Pack/pallet
MECX	Externally chamfered foundation box in stainless steel with mechanical stop on opening	20
MECF	Externally chamfered foundation box with cataphoresis finish with mechanical stop on opening	20

Note: key release mechanism, freely compatible with selection of models MEA2 and MEA3 motor.

Technical specifications

Code	ME3024	ME3000	ME3000L	ME3010
Electrical data				
Power supply (Vac 50 Hz)*	-	230		
Power supply (Vdc)	24	-		
Absorption (A)	5	1.2	1.3	1.4
Power (W)	120	250	300	290
Performance data				
Speed (Rpm)	1.4	1.14	0.8	1.14
Torque (Nm)	250	300	250	300
Work cycle (%)	80	30		40
Dimensional and general data				
Protection level (IP)	67			
Working temp. (°C Min/Max)	-20 ÷ +50			
Dimensions (mm)	390x322x194.5 h			
Weight (kg)	11			11.5

*60 Hz version available on request.

Utilisation limits

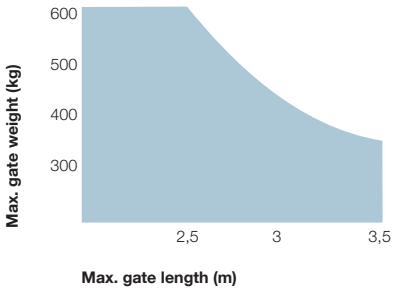

The shape, the height of the gate and the weather conditions can considerably reduce the values shown in the graph to the side.
Use in windy areas 230 Vac models.

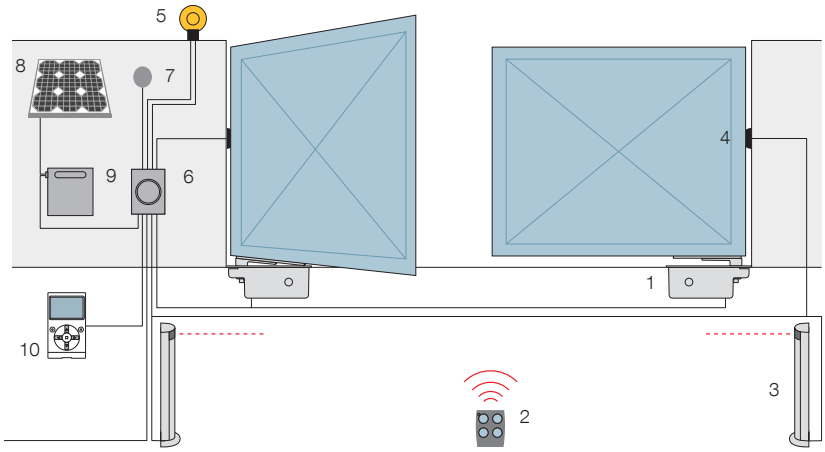

1. Metroplex **2.** Transmitter **3.** Photocells mounted on posts **4.** Photocells **5.** Flashing light **6.** Control unit **7.** Digital or key switches **8.** SYP* solar panel **9.** PSY24* battery box **10.** O-View* multifunction display.

*Optional connection to Solemyo and Opera systems.

Accessories

MEA2
Key unlock system.

Pc/pack 1

MEA3
Lever-type key unlock system to use when system is installed on surfaces such as sand or earth.

Pc/pack 1

MEA5
Lever-type unlock key for MEA3.

Pc/pack 4

MEA6
Limit switch bracket, for installations where box embedding in concrete is not possible.

Pc/pack 1

MEA1
Accessory for opening up to 360° for gates max. 2.5 m in length.

Pc/pack 1

PLA10
Vertical 12 V electric lock (required for gates longer than 3 m).

Pc/pack 1

Accessory

For 24 Vdc version

PLA11
Horizontal 12 V electric lock (required for gates longer than 3 m).

Pc/pack 1

TS
Signboard.

Pc/pack 1

PS324
24 V battery with integrated battery charger.

Pc/pack 1

Solemyo system

The solar power kit Solemyo to automate gates, garage doors or barrier gates, including those located far from the power mains and without the need for costly and invasive excavation work.
See pages 186/187

Opera system

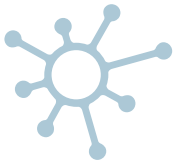

The innovative Opera system enables the installer to manage, program and control automation systems, also remotely, simply and safely, with significant savings in time.
See pages 140/141

Metro Box: brand new models of externally chamfered foundation box ensuring optimal resistance to corrosion!

Nice recommends customers order products in pallets in order to facilitate storage and delivery, and ensure packs are uniform. The number of packs per single pallet has been specified for this reason. Approximate draft.

Nice Big-Metro

NEW | Solemyo | Opera | Blue BUS | 24V

For swing gates with leaves up to 5 m, underground installation.
Irreversible electromechanical gear motor, 24 Vdc with magnetic encoder and mechanical stop.

Chamfered foundation boxes
with mechanical stop on opening:
- **in stainless steel** (BMBOXI), ideal for use in extreme conditions,
- **with cataphoresis paint finish** (BMBOX), highly resistant to corrosion.

Maximum freedom of choice: release from inside or outside, two key or lever operated models, freely combinable and easy to operate with just one hand.

Simple to use: mechanical stop system on closure. Standard opening to 110°, or optional 360°.

Ideal for intensive use, compatible with the control unit Moonclever MC824H:
- simple programming via a single key;
- self-learning of travel limits on opening and closing;
- self-diagnostics of faults;
- programming of pause time;
- pass door;
- deceleration on opening and closing;
- dual technology obstacle detection;
- operation in the event of a power failure with optional rechargeable batteries (PS324);
- provision for connection of latest generation sensitive edges.

Code	Description	Pack/pallet
BM5024	Irreversible, 24 Vdc, with magnetic encoder, with mechanical stop on closing	18
BMBOX	Foundation box, with cataphoresis paint finish, with built-in mechanical stop on opening	18
BMBOXI	Stainless steel foundation box, with built-in mechanical stop on opening	18

Note: key release mechanism, freely compatible with selection of models MEA2 and MEA3 motor.

Technical specifications

Code	**BM5024**
Electrical data	
Power supply (Vdc)	24
Absorption (A)	7
Power (W)	170
Performance data	
Speed (Rpm)	0.8
Torque (Nm)	400
Work cycle (cycles/hour)	45
Dimensional and general data	
Protection level (IP)	67
Working temp. (°C Min/Max)	-20 ÷ +50
Dimensions (mm)*	400x325x150 h
Weight (kg)	12

*With foundation box

Utilisation limits

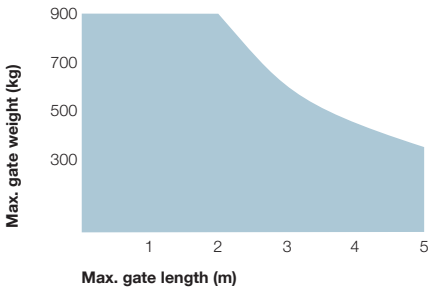

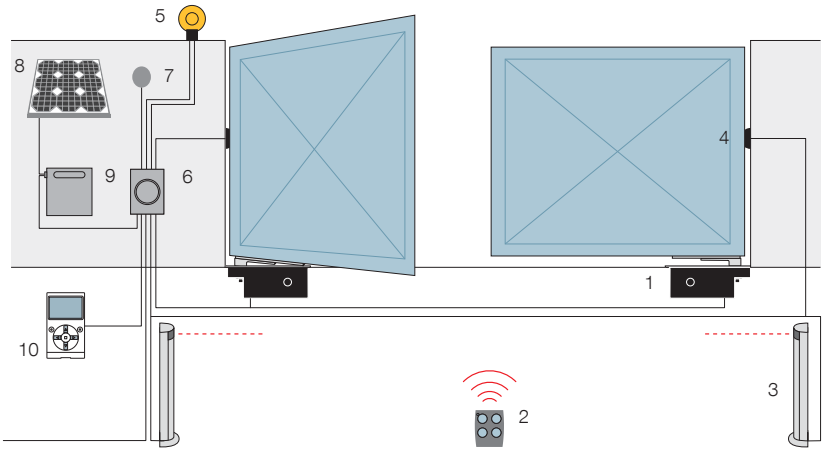

1. Big-Metro **2.** Transmitter **3.** Photocells mounted on posts **4.** Photocells **5.** Flashing light
6. Control unit **7.** Digital or key switches
8. SYP* solar panel **9.** PSY24* battery box
10. O-View* multifunction display.

*Optional connection to Solemyo and Opera systems.

Accessories

MEA2
Key unlock system.

Pc/pack 1

MEA3
Lever-type key unlock system to use when system is installed on surfaces such as sand or earth.

Pc/pack 1

MEA5
Lever-type unlock key for MEA3.

Pc/pack 4

BMA1
Accessory for opening up to 360° for gates max. 3.5 m in length.

Pc/pack 1

PLA10
Vertical 12 V electric lock (required for gates longer than 3 m).

Pc/pack 1

PLA11
Horizontal 12 V electric lock (required for gates longer than 3 m).

Pc/pack 1

TS
Signboard.

Pc/pack 1

Accessory

For 24 Vdc version

PS324
24 V battery with integrated battery charger.

Pc/pack 1

Solemyo system

The solar power kit Solemyo to automate gates, garage doors or barrier gates, including those located far from the power mains and without the need for costly and invasive excavation work.
See pages 186/187

Opera system

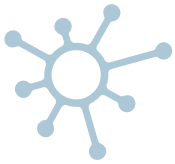

The innovative Opera system enables the installer to manage, program and control automation systems, also remotely, simply and safely, with significant savings in time.
See pages 140/141

Nice recommends customers order products in pallets in order to facilitate storage and delivery, and ensure packs are uniform. The number of packs per single pallet has been specified for this reason. Approximate draft.

Systems for sliding gates

4|11 The Nice World

12|65 Systems for swing gates

66|85 Systems for sliding gates

86|109 Barrier gate operator systems

110|137 Systems for garage and industrial doors

138|179 Control systems

180|205 Accessories

206|225 Control units

226|229 Product code alphabetical index

For residential use, installed inside a compact post	70|71	Naked Sliding 400
For residential and industrial use	72|73	Robus 400/600/1000
	74|75	RobusKit 400
	76|77	RobusKit 600
	78|79	RoadKit
	80|81	Run 1500
	82|83	Run 1800/2500
	84	Tub
Racks	85	

Nice Selection guide

Follow the arrow and choose the right product

For residential use, installed inside a compact post

Irreversible, 24 Vdc, with built-in control unit and absolute encoder. With BlueBUS technology, compatible for operation with Solemyo and Opera.
Naked Sliding 400
pag. 70/71
→ for gates up to 400 kg → **NKSL400**

For residential use, also available in kit

Irreversible, 24 Vdc, with built-in control unit. With BlueBUS technology, compatible for operation with Solemyo and Opera.
Robus
RobusKit
pages 72/77

- for gates up to 400 kg → electromechanical limit switch → **RB400**
  - **Kit** → **RB400KCE**
- for gates up to 600 kg → electromechanical limit switch → **RB600**
  - **Kit** → **RB600KCE**
  - inductive limit switch → **RB600P**
- for gates up to 1000 kg → electromechanical limit switch → **RB1000**
  - inductive limit switch → **RB1000P**

Irreversible, 24 Vdc, with built-in control unit.
RoadKit
pages 78/79
→ for gates up to 300 kg with leaf length up to 6 m → **RDKCE**

For residential and industrial use

Irreversible, with built-in control unit, with BlueBUS technology.
Run
pages 80/83

- 24 Vdc compatible for operation with Solemyo and Opera
  - for gates up to 1500 kg → electromechanical limit switch → **RUN1500**
    - inductive limit switch → **RUN1500P**
  - for gates up to 1800 kg → electromechanical limit switch → **RUN1800**
    - inductive limit switch → **RUN1800P**
  - for gates up to 2500 kg → electromechanical limit switch → **RUN2500**
    - with inverter → **RUN2500I**
    - inductive limit switch → **RUN2500P**
- 230 Vac compatible for operation with Opera

For industrial use

Irreversible, 400 Vac, with built-in control unit.
Tub
page 84
→ for gates up to 3500 kg → **TUB3500**

Naked Sliding 400

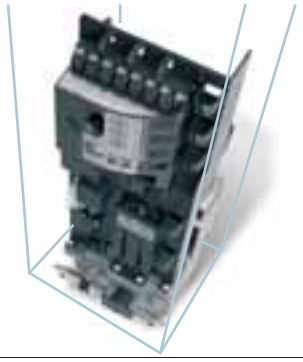

Robus
RobusKit

RoadKit

Run

Tub

Nice Naked Sliding 400

NEW | Sole myo | Opera | Blue BUS | 24V

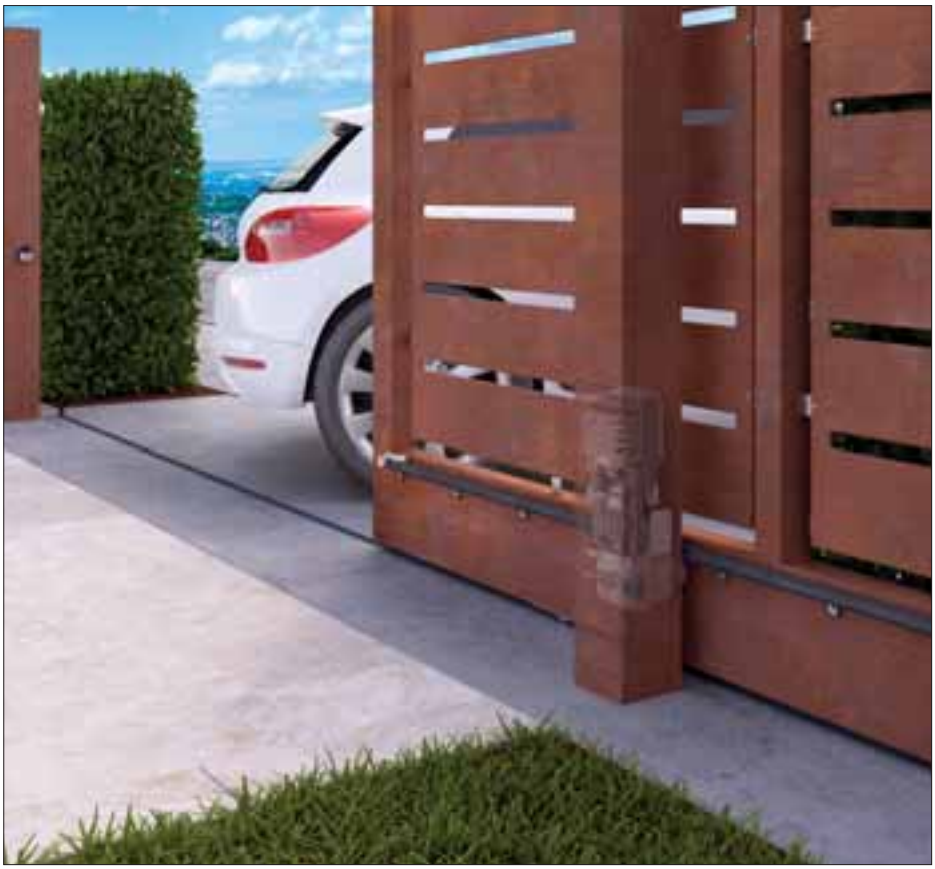

Code	Description	Pack/pallet
NKSL400	Irreversible, 24 Vdc, with built-in control unit and absolute encoder allowing integration in post	16

The first Nice concealed motor for sliding gates up to 400 Kg with leaf length up to 6 m.
Motor with built-in control unit and absolute encoder which can be **installed inside a compact post** with suitable holes.

Its **extremely small size** allows the motor to be installed even in very slender posts, with interior size down to 140x140 mm.

User-friendly: thanks to the BlueBUS system, allowing the control unit to be connected to up to 7 pairs of Moonbus series photocells and control, security and signalling devices with just two wires.

State-of-the-art: it features a temperature sensor that adapts the motor force to weather conditions, also modulating the overload protection.

Master/slave selection: for automatic synchronisation even of 2 motors, allowing automation of sliding gates with two opposing leaves.

Intelligent: thanks to obstacle detection and automatic working time programming. Self-diagnostics with flashing light signalling.

Safe: adjustable acceleration and deceleration at the start and end of every opening and closing operation.

User-friendly, precise limit switch adjustment: integral absolute limit switch, quick learning with just one opening or closing operation with motor released.

Practical: control unit and optional PS124 buffer batteries can be connected by means of practical guided - connector.

Flexible: unlocking can be provided on both sides of the post and/or on the outside (with the KIO and KA1 accessories). Also easy to install on existing posts.

Technical specifications

Code	NKSL400
Electrical data	
Power supply (Vac 50/60 Hz)	230 V
Absorption (A)	1.1
Power (W)	250 W
Performance data	
Speed (m/s)	0.34
Force (N)	400
Work cycle (cycles/hour)	35
Dimensional and general data	
Protection level (IP)	10*
Working temp. (°C Min/Max)	-20 ÷ +50
Dimensions (mm)	131x172x405 h
Weight (kg)	6.5

* The protection degree of the automation is determined by the composition motor and column.

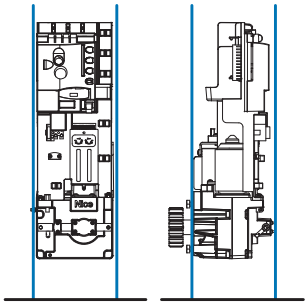

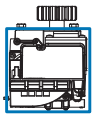

140 mm

140 mm

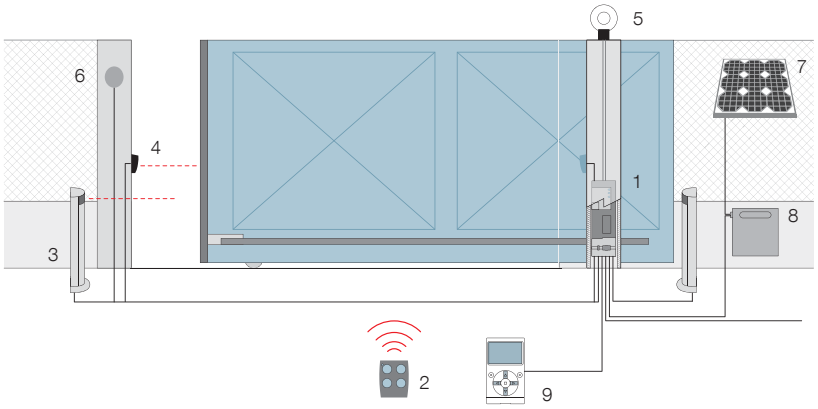

1. Naked **2.** Transmitter **3.** Photocells mounted on posts **4.** Photocells **5.** Flashing light **6.** Digital or key switches **7.** SYP* solar panel **8.** PSY24* battery box **9.** O-View* multifunction display.

*Optional connection to Solemyo and Opera systems.

Accessories

NKA3
Spare control unit.

Pc/pack 1

PS124
24 V battery with integrated battery charger.

Pc/pack 1

ROA6
M4 25x20x1000 mm slotted nylon rack with metal insert for gates weighing up to 500 kg.

Pc/pack 10

ROA7
M4 rack, zinc coated, 22x22x1000 mm.

Pc/pack 10

ROA8
M4 rack, 30x8x1000 mm, zinc coated with spacers and screws.

Pc/pack 10

KIO
Key-operated selector switch for low voltage contacts, with release mechanism for metal cord.

Pc/pack 1

KA1
6 m cable release kit for KIO.

Pc/pack 1

TS
Signboard.

Pc/pack 1

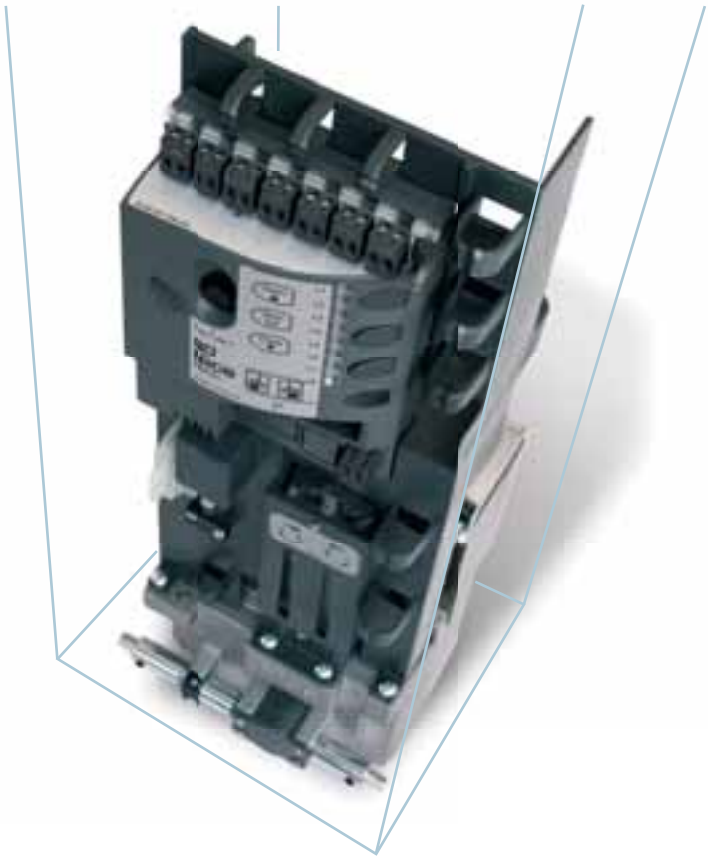

Solemyo system

The solar power kit Solemyo to automate gates, garage doors or barrier gates, including those located far from the power mains and without the need for costly and invasive excavation work.
See pages 186/187

Opera system

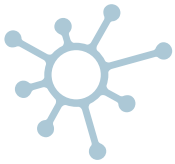

The innovative Opera system enables the installer to manage, program and control automation systems, also remotely, simply and safely, with significant savings in time.
See pages 140/141

Nice recommends customers order products in pallets in order to facilitate storage and delivery, and ensure packs are uniform. The number of packs per single pallet has been specified for this reason. Approximate draft.

Nice Robus 400/600/1000

Code	Description	Pack/pallet
RB400	Irreversible, 24 Vdc, with incorporated control unit, with electromechanical limit switch, for gates up to 400 kg	15
RB600	Irreversible, 24 Vdc, with incorporated control unit, with electromechanical limit switch, for gates up to 600 kg	15
RB600P	Irreversible, 24 Vdc, with incorporated control unit, with inductive limit switch, for gates up to 600 kg	15
RB1000	Irreversible, 24 Vdc, with incorporated control unit, with electromechanical limit switch, for gates up to 1000 kg	15
RB1000P	Irreversible, 24 Vdc, with incorporated control unit, with inductive limit switch, for gates up to 1000 kg	15

For sliding gates weighing up to 400 kg (RB400), **up to 600 kg** (RB600) **and up to 1000 kg** (RB1000).

Versions with electromechanical limit switch (RB400/RB600/RB1000) **and with inductive limit switch** (RB400P/RB600P/RB1000P).

User-friendly: the Nice BlueBUS technology, enables to power and control a maximum of seven couples of photocells from the MoonBus series using two wires only.

Practical: the control unit and PS124 buffer battery (optional) can be connected by means of a simple connector and can be housed directly inside the motor.

Advanced: RB400, RB600 and RB1000 are equipped with a temperature sensor: adapt the motor power to the climatic conditions and at the same time thermal cut-out. A master/slave selection automatically synchronises two motors. This means it is possible to automate 2-leaf sliding gates set opposite each other.

Intelligent: thanks to the obstacle detection system and automatic programming of the working times. Self-diagnosis by means of a flashing light. 8 programming levels.

Safe: acceleration and deceleration can be adjusted at the beginning and end of each opening and closing manoeuvre.

Sturdy: base and release in pressure die cast with easy to open handle.

Very quiet: gear motor on bearings.

Technical specifications

Code	RB400	RB600/600P	RB1000/1000P
Electrical data			
Power supply (Vac 50/60 Hz)	230		
Absorption (A)	1.1	2.5	2.3
Power (W)	250	515	450
Performance data			
Speed (m/s)	0.34	0.31	0.28
Force (N)	400	600	900
Work cycle (cycles/hour)	35	40	50
Dimensional and general data			
Protection level (IP)	44		
Working temp. (°C Min/Max)	-20 ÷ +50		
Dimensions (mm)	330x210x303 h		
Weight (kg)	8	11	13

Nice recommends customers order products in pallets in order to facilitate storage and delivery, and ensure packs are uniform. The number of packs per single pallet has been specified for this reason. Approximate draft.

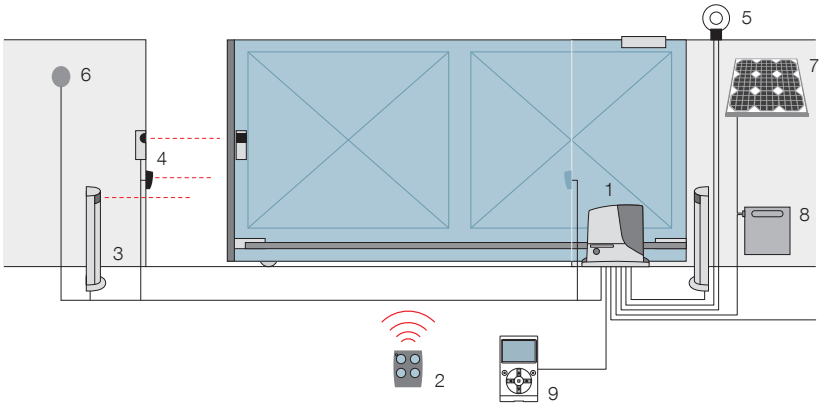

1. Robus **2.** Transmitter **3.** Photocells mounted on posts **4.** Photocells **5.** Flashing light **6.** Digital or key switches **7.** SYP* solar panel **8.** PSY24* battery box **9.** O-View* multifunction display.

*Optional connection to Solemyo and Opera systems.

Accessories

RBA3
Spare control unit for RB400, RB600/600P, RB1000/1000P and RUN1500/1500P.

Pc/pack 1

PS124
24 V battery with integrated battery charger.

Pc/pack 1

RBA1
Inductive limit switch.

Pc/pack 1

ROA6
(for RB400)
M4 25x20x1000 mm slotted nylon rack with metal insert for gates weighing up to 500 kg.

Pc/pack 10

ROA7
M4 rack, zinc coated, 22x22x1000 mm.

Pc/pack 10

ROA8
M4 rack, 30x8x1000 mm, zinc coated with spacers and screws.

Pc/pack 10

TS
Signboard.

Pc/pack 1

Solemyo system

The solar power kit Solemyo to automate gates, garage doors or barrier gates, including those located far from the power mains and without the need for costly and invasive excavation work.
See pages 186/187

Opera system

The innovative Opera system enables the installer to manage, program and control automation systems, also remotely, simply and safely, with significant savings in time.
See pages 140/141

Nice RobusKit 400

Sole myo | Opera | Blue BUS | 24V

RB400

ON2

MOFB

MOSE

MLBT

TS

The kit contains:

RB400 1 irreversible electromechanical gear motor, with incorporated control unit and OXI plug-in receiver which can be used for connections via Nice BlueBUS. **ON2** 1 transmitter 433.92 MHz, 2 channels.
MOFB 1 couple of external photocells designed for connection by Nice BlueBUS.
MOSE 1 key selector switch for outdoor installation. **MLBT** 1 flashing light with integrated aerial.
TS 1 signboard.

Code	Description	Pack/pallet
RB400KCE	Kit for the automation of sliding gates up to 400 kg, 24 Vdc, incorporated control unit	14

N.B. The content of the package may vary: consult the retailer.

For sliding gates weighing up to 400 kg.

User-friendly: the Nice BlueBUS technology, enables to power and control a maximum of seven couples of photocells from the MoonBus series using two wires only.

Practical: the control unit and PS124 buffer battery (optional) can be connected by means of a simple connector and can be housed directly inside Robus.

Advanced: RB400 is equipped with a temperature sensor: adapt the motor power to the climatic conditions and at the same time thermal cut-out. A master/slave selection automatically synchronises two motors. This means it is possible to automate 2-leaf sliding gates set opposite each other.

Intelligent: thanks to the obstacle detection system and automatic programming of the working times. Self-diagnosis by means of a flashing light. 8 programming levels.

Safe: acceleration and deceleration can be adjusted at the beginning and end of each opening and closing manoeuvre.

Sturdy: base and release in pressure die cast aluminium and epoxy paint finish.

Very quiet: gear motor on bearings.

Technical specifications

Code	**RB400**
Electrical data	
Power supply (Vac 50/60 Hz)	230
Absorption (A)	1.1
Power (W)	250
Performance data	
Speed (m/s)	0.34
Force (N)	400
Work cycle (cycles/hour)	35
Dimensional and general data	
Protection level (IP)	44
Working temp. (°C Min/Max)	-20 ÷ +50
Dimensions (mm)	330x195x277 h
Weight (kg)	8

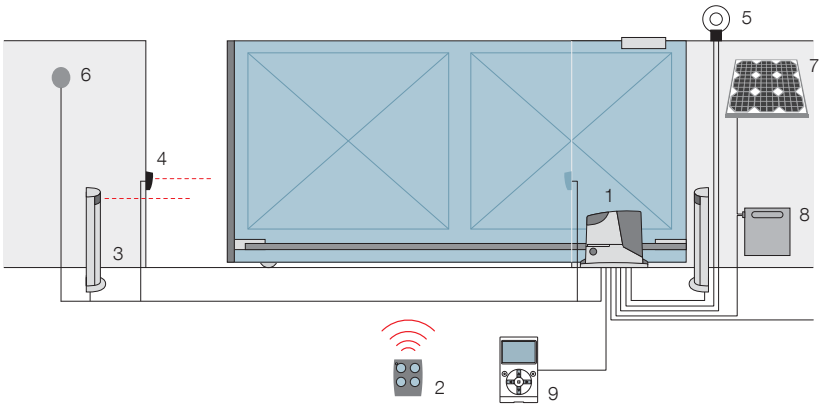

1. Robus **2.** Transmitter **3.** Photocells mounted on posts **4.** Photocells **5.** Flashing light **6.** Digital or key switches **7.** SYP* solar panel **8.** PSY24* battery box **9.** O-View* multifunction display.

*Optional connection to Solemyo and Opera systems.

Accessories

RBA3
Spare control unit for RB400, RB600/600P, RB1000/1000P and RUN1500/1500P.

Pc/pack 1

PS124
24 V battery with integrated battery charger.

Pc/pack 1

RBA1
Inductive limit switch.

Pc/pack 1

ROA6
M4 25x20x1000 mm slotted nylon rack with metal insert for gates weighing up to 500 kg.

Pc/pack 10

ROA7
M4 rack, zinc coated, 22x22x1000 mm.

Pc/pack 10

ROA8
M4 rack, 30x8x1000 mm, zinc coated with spacers and screws.

Pc/pack 10

Solemyo system

The solar power kit Solemyo to automate gates, garage doors or barrier gates, including those located far from the power mains and without the need for costly and invasive excavation work.
See pages 186/187

Opera system

The innovative Opera system enables the installer to manage, program and control automation systems, also remotely, simply and safely, with significant savings in time.
See pages 140/141

Nice recommends customers order products in pallets in order to facilitate storage and delivery, and ensure packs are uniform. The number of packs per single pallet has been specified for this reason. Approximate draft.

Nice RobusKit 600

Sole myo | Opera | Blue BUS | 24V

RB600

ON2	MOFB	MOSE
MLBT	**TS**	

The kit contains:

RB600 1 irreversible electromechanical gear motor, with incorporated control unit and OXI plug-in receiver which can be used for connections via Nice BlueBUS. **ON2** 1 transmitter 433.92 MHz, 2 channels.
MOFB 1 couple of external photocells designed for connection by Nice BlueBUS.
MOSE 1 key selector switch for outdoor installation. **MLBT** 1 flashing light with integrated aerial.
TS 1 signboard.

For sliding gates weighing up to 600 kg.

User-friendly: the Nice BlueBUS technology, enables to power and control a maximum of seven couples of photocells from the MoonBus series using two wires only.

Practical: the control unit and PS124 buffer battery (optional) can be connected by means of a simple connector and can be housed directly inside the motor.

Advanced: RB600 is equipped with a temperature sensor: adapt the motor power to the climatic conditions and at the same time thermal cut-out; a master/slave selection automatically synchronises two motors.
This means it is possible to automate 2-leaf sliding gates set opposite each other.

Intelligent: thanks to the obstacle detection system and automatic programming of the working times.
Self-diagnosis by means of a flashing light.
8 programming levels.

Safe: acceleration and deceleration can be adjusted at the beginning and end of each opening and closing manoeuvre.

Sturdy: base and release in pressure die cast with easy to open handle.

Very quiet: gear motor on bearings.

Code	Description	Pack/pallet
RB600KCE	Kit for the automation of sliding gates up to 600 kg, 24 Vdc, incorporated control unit	14

N.B. The content of the package may vary: consult the retailer.

Technical specifications

Code	**RB600**
Electrical data	
Power supply (Vac 50/60 Hz)	230
Absorption (A)	2.5
Power (W)	515
Performance data	
Speed (m/s)	0.31
Force (N)	600
Work cycle (cycles/hour)	40
Dimensional and general data	
Protection level (IP)	44
Working temp. (°C Min/Max)	-20 ÷ +50
Dimensions (mm)	330x210x303h
Weight (kg)	11

Nice recommends customers order products in pallets in order to facilitate storage and delivery, and ensure packs are uniform. The number of packs per single pallet has been specified for this reason. Approximate draft.

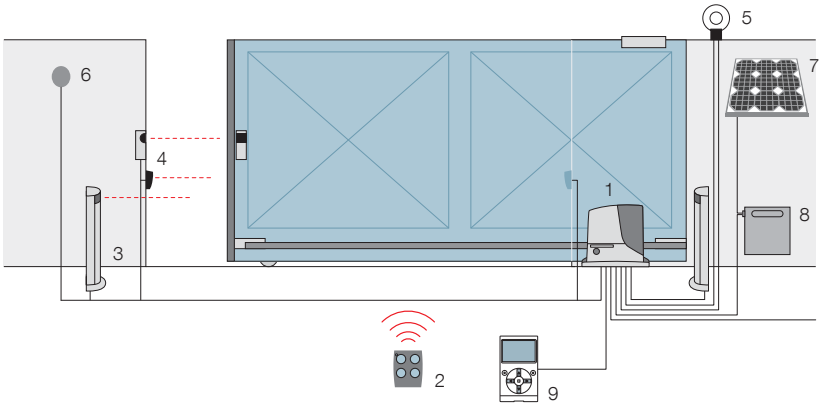

1. Robus **2.** Transmitter **3.** Photocells mounted on posts **4.** Photocells **5.** Flashing light **6.** Digital or key switches **7.** SYP* solar panel **8.** PSY24* battery box **9.** O-View* multifunction display.

*Optional connection to Solemyo and Opera systems.

Accessories

RBA3
Spare control unit for RB400, RB600/600P, RB1000/1000P and RUN1500/1500P.

Pc/pack 1

PS124
24 V battery with integrated battery charger.

Pc/pack 1

RBA1
Inductive limit switch.

Pc/pack 1

ROA7
M4 rack, zinc coated, 22x22x1000 mm.

Pc/pack 10

ROA8
M4 rack, 30x8x1000 mm, zinc coated with spacers and screws.

Pc/pack 10

Solemyo system

The solar power kit Solemyo to automate gates, garage doors or barrier gates, including those located far from the power mains and without the need for costly and invasive excavation work.
See pages 186/187

Opera system

The innovative Opera system enables the installer to manage, program and control automation systems, also remotely, simply and safely, with significant savings in time.
See pages 140/141

RD300

FLO2R-S

MOF

MOSE

MLBT

TS

The kit contains:

RD300 1 irreversible electromechanical gear motor, 24 Vdc, with incorporated control unit and receiver.
FLO2R-S 1 transmitter 433.92 MHz, 2 channels. **MOF** 1 pair of photocells for outdoor installation.
MOSE 1 key selector switch for outdoor installation. **MLBT** 1 flashing light with integrated aerial.
TS 1 signboard.

For sliding gates weighing up to 300 kg and up to 6 m lenght.

Practical: built-in control unit, can be connected by means of a simple connector and can be housed directly inside the motor; incorporated radio card, compatible with the Nice Flo and Smilo systems: 150 transmitters can be entered!

Advanced: the speed, strength and pause can all be adjusted.

Intelligent: thanks to the obstacle detection system and automatic programming of the working times.
Self-diagnosis by means of a flashing light.

Safe: acceleration and deceleration can be adjusted at the beginning and end of each opening and closing manoeuvre.

Code	Description
RDKCE	Kit for the automation of sliding gates up to 300 kg and up to 6 m lenght, 24 Vdc, with incorporated control unit and receiver

N.B. The content of the package may vary: consult the retailer.

Technical specifications

Code	**RD300**
Electrical data	
Power supply (Vac 50/60 Hz)	230
Absorption (A)	1.1
Power (W)	210
Performance data	
Speed (m/s)	0.25
Force (N)	300
Work cycle (cycles/hour)	20
Dimensional and general data	
Protection level (IP)	44
Working temp. (°C Min/Max)	-20 ÷ +50
Dimensions (mm)	330x195x277 h
Weight (kg)	8

Nice recommends customers order products in pallets in order to facilitate storage and delivery, and ensure packs are uniform. The number of packs per single pallet has been specified for this reason. Approximate draft.

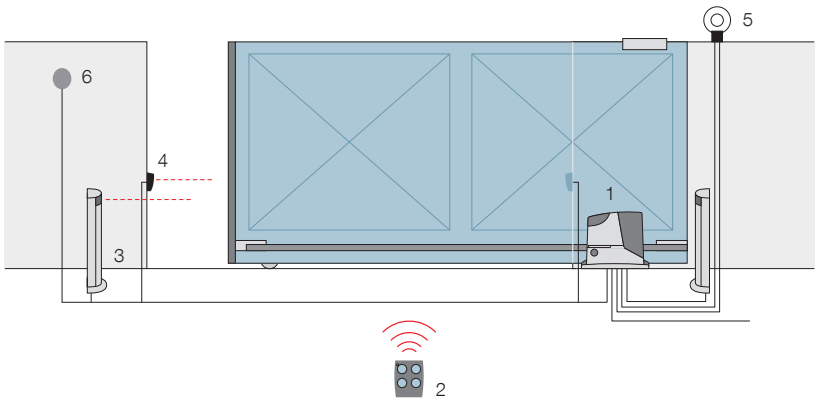

1. Road **2.** Transmitter **3.** Photocells mounted on posts **4.** Photocells **5.** Flashing light **6.** Digital or key switches.

Accessories

RBA4
Spare control unit for RDKCE.

CM-B
Pawl with two metal release keys.

LO5
Plastic rack 26x26x500 mm, for gates weighing up to 400 kg.

Pc/pack 10

ROA6
M4 25x20x1000 mm slotted nylon rack with metal insert for gates weighing up to 500 kg.

Pc/pack 10

ROA7
M4 rack, zinc coated, 22x22x1000 mm.

Pc/pack 10

ROA8
M4 rack, 30x8x1000 mm, zinc coated with spacers and screws.

Pc/pack 10

Nice Run 1500

Code	Description	Pack/pallet
RUN1500	Irreversible, 24 Vdc, with built-in control unit, with electromechanical limit switch, for sliding gates weighing up to 1500 kg	12
RUN1500P	Irreversible, 24 Vdc, with built-in control unit, with inductive limit switch, for sliding gates weighing up to 1500 kg	12

For sliding gates weighing up to 1500 kg.

Versions with electromechanical limit switch (RUN1500) **and with inductive limit switch** (RUN1500P).

User-friendly: the BlueBUS technology, enables to power and control a maximum of 7 couples of photocells from the MoonBus series using two wires only.

Practical: the control unit and PS124 buffer battery (optional) can be connected by means of a simple connector and can be housed directly inside the motor.

Advanced: the temperature sensor adapts the motor force to weather conditions, setting the thermal cut-out protection accordingly; a master/slave selection automatically synchronises 2 motors, enabling the automation of sliding gates with two opposing leaves.

Intelligent: thanks to the obstacle detection system and automatic programming of the working times.
Self-diagnosis by means of a flashing light.
8 programming levels.

Safe: acceleration and deceleration can be adjusted at the beginning and end of each opening and closing manoeuvre.

Sturdy: aluminium release handle for easy opening.

Very quiet: gear motor on bearings.

Technical specifications

Code	**RUN1500/1500P**
Electrical data	
Power supply (Vac 50/60 Hz)	230
Absorption (A)	2
Power (W)	400
Performance data	
Speed (m/s)	0.25
Force (N)	1000
Work cycle (cycles/hour)	60
Dimensional and general data	
Protection level (IP)	44
Working temp. (°C Min/Max)	-20 ÷ +50
Dimensions (mm)	400x255x390 h
Weight (kg)	19

Nice recommends customers order products in pallets in order to facilitate storage and delivery, and ensure packs are uniform. The number of packs per single pallet has been specified for this reason. Approximate draft.

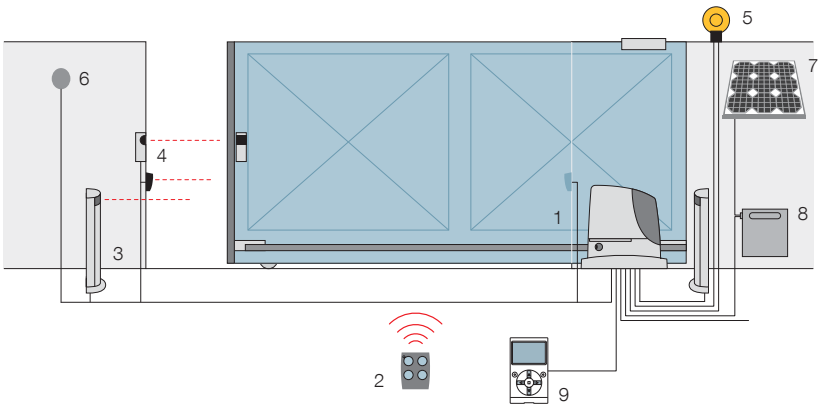

1. Run **2.** Transmitter **3.** Photocells mounted on posts **4.** Photocells **5.** Flashing light **6.** Digital or key switches **7.** SYP* solar panel **8.** PSY24* battery box **9.** O-View* multifunction display.

*Optional connection to Solemyo and Opera systems.

Accessories

RBA3
Spare control unit for RB400, RB600/600P, RB1000/1000P and RUN1500/1500P.

Pc/pack 1

PS124
24 V battery with integrated battery charger.

Pc/pack 1

RBA1
Inductive limit switch.

Pc/pack 1

ROA7
M4 rack, zinc coated, 22x22x1000 mm.

Pc/pack 10

ROA8
M4 rack, 30x8x1000 mm, zinc coated with spacers and screws.

Pc/pack 10

ROA81
M6 rack, 30x30x1000 mm, zinc coated, to be coupled with RUA12.

Pc/pack 1

RUA12
12-teeth pinion, module 6, to be coupled with rack ROA81.
The Run automation is supplied with a module 4 pinion to be used with the standard racks ROA7 and ROA8.

Pc/pack 1

TS
Signboard.

Pc/pack 1

Solemyo system

The solar power kit Solemyo to automate gates, garage doors or barrier gates, including those located far from the power mains and without the need for costly and invasive excavation work.
See pages 186/187

Opera system

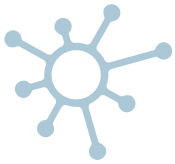

The innovative Opera system enables the installer to manage, program and control automation systems, also remotely, simply and safely, with significant savings in time.
See pages 140/141

Nice Run 1800/2500

Code	Description	Pack/pallet
RUN1800	Irreversible, 230 Vac, with built-in control unit, with electromechanical limit switch, for sliding gates weighing up to 1800 kg	12
RUN1800P	Irreversible, 230 Vac, with built-in control unit, with inductive limit switch, for sliding gates weighing up to 1800 kg	12
RUN2500	Irreversible, 230 Vac, with built-in control unit, with electromechanical limit switch, for sliding gates weighing up to 2500 kg	12
RUN2500P	Irreversible, 230 Vac, with built-in control unit, with inductive limit switch, for sliding gates weighing up to 2500 kg	12
RUN2500I	Irreversible, 230 Vac, with built-in control unit and inverter, with electromechanical limit switches, for sliding gates weighing up to 2500 kg	12

For sliding gates weighing up to 1800 kg (RUN1800) **and up to 2500 kg** (RUN2500).

Ventilated motor with inductive limit switch (RUN1800P/RUN2500P) **or electromechanical limit switch** (RUN1800/RUN2500I/RUN2500).

Suitable to operate in extreme conditions, in systems for intensive use.

Simple to install: the BlueBUS system enables connections by means of just two wires between the control unit and up to 15 control safety and signalling devices.

Safe: the acceleration settings (at the start of the manoeuvre) and the deceleration settings (at the end of the manoeuvre) are precise and reliable.

The temperature sensor: Run is able to manage force, adapting it to the different climatic and environmental conditions, while adapting the thermal cut-out protection and intensity of self-ventilation, depending on the temperature reading.

A **master/slave** selection also automatically synchronises 2 motors, enabling the automation of sliding gates with two opposing leaves.

Practical and functional: the control unit (and inverter on version RUN2500I), housed inside Run, can be simply connected by means of the practical connector guide.

Very quiet: gear motor on bearings.

RUN2500I version with built-in inverter

Perfect movement: the inverter enables the power supply and drive of the 3-phase motor with single-phase current at 230 Vac, acting on the frequency to adjust speed of the automation from a minimum of 8.2 m/min to maximum 15.4 m/min. In the automation deceleration phase, the inverter, which dialogues with the control unit, increases the torque, thus improving performance and reducing the risk of the automation blocking on impact with obstacles.

Technical specifications

Code	RUN1800/1800P	RUN2500/2500P	RUN2500I
Electrical data			
Power supply (Vac/Hz)	230/50*		230/50-60
Absorption (A)	3	3.8	3.7
Power (W)	700	870	650
Performance data			
Speed (m/s)	0.17		0.26
Force (N)	1110	1390	1660
Work cycle (cycles/hour)	42		56
Dimensional and general data			
Protection level (IP)	44		
Working temp. (°C Min/Max)	-20 ÷ +50		
Dimensions (mm)	400x255x390 h		
Weight (kg)	24.5		25

*60 Hz version available on request.

Nice recommends customers order products in pallets in order to facilitate storage and delivery, and ensure packs are uniform. The number of packs per single pallet has been specified for this reason. Approximate draft.

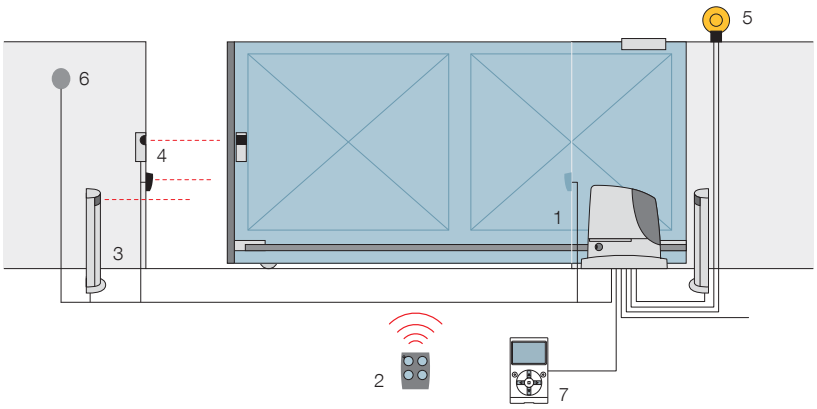

1. Run **2.** Transmitter **3.** Photocells mounted on posts **4.** Photocells **5.** Flashing light **6.** Digital or key switches **7.** O-View* multifunction display.

*Optional connection to Opera system.

Accessories

RUA1
Spare control unit for RUN1800/1800P and RUN2500/2500P.

Pc/pack 1

RUA2
Spare control unit for RUN2500I.

Pc/pack 1

RUA3
Spare inverter for RUN2500I.

Pc/pack 1

ROA7
M4 rack, zinc coated, 22x22x1000 mm.

Pc/pack 10

ROA8
M4 rack, 30x8x1000 mm, zinc coated with spacers and screws.

Pc/pack 10

ROA81
M6 rack, 30x30x1000 mm, zinc coated, to be coupled with RUA12.

Pc/pack 1

RUA12
12-teeth pinion, module 6, to be coupled with rack ROA81.
The Run automation is supplied with a module 4 pinion to be used with the standard racks ROA7 and ROA8.

Pc/pack 1

TS
Signboard.

Pc/pack 1

Opera system

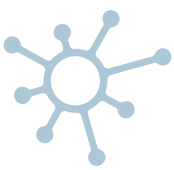

The innovative Opera system enables the installer to manage, program and control automation systems, also remotely, simply and safely, with significant savings in time.
See pages 140/141

Nice Tub

400V

For sliding gates weighing up to 3500 kg.
Ideal for industrial use.
Irreversible electromechanical 400 Vac gear motor with built-in Mindy A500 control unit.

Powerful: 550 W absorbed output and a peak thrust of over 400 Nm.

Functionality and safety: programmable, electronic brake which prevents gate inertia; self-ventilated motor to increase the working cycles; optional PIU card to increase the basic functions; possibility of slowdown.

Maximum durability and silence: bronze and metal gears.

Advanced: Tub meets all requirements in terms of control, thanks to the functions which can be selected by means of dipswitches.

Practical: the lever release enables safe and simple operation.

Code	Description
TUB3500	Irreversible, electromechanical limit switch, 400 Vac, with built-in Mindy A500 control unit

Technical specifications

Code	**TUB3500**
Electrical data	
Power supply (Vac 50 Hz)*	400
Absorption (A)	1.65
Power (W)	550
Performance data	
Speed (m/s)	0.17
Force (N)	7740
Work cycle (cycles/day)	200
Dimensional and general data	
Protection level (IP)	44
Working temp. (°C Min/Max)	-20 ÷ +50
Dimensions (mm)	480x240x580 h
Weight (kg)	60

*Usable also at 60 Hz with consequent change in performance ratings.

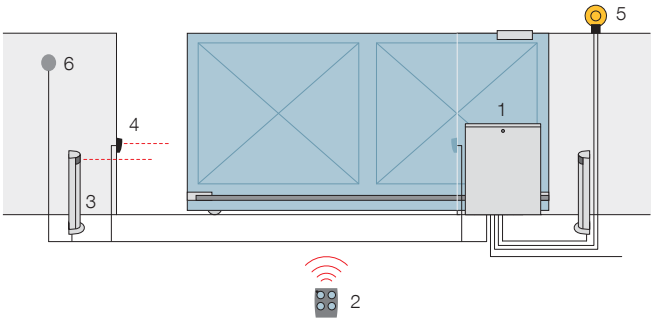

1. Tub **2.** Transmitter **3.** Photocells mounted on posts **4.** Photocells **5.** Flashing light **6.** Digital or key switches.

Accessories

A500
Spare control unit.
Pc/pack 1

PIU
Expansion card for control unit.
Pc/pack 1

ROA81
M6 rack, 30x30x1000 mm, zinc coated.
Pc/pack 1

TS
Signboard.
Pc/pack 1

Nice Racks

For sliding gates or on motors with pinion.

Plastic racks are available for lightweight gates up to 400 kg (LO5) and up to 500 kg (ROA6) and galvanised racks, ideal for any type of sliding gate, residential and industrial: ROA7 for direct welding on the gate, and the practical ROA8 (the spacers are welded onto the gate, and then the rack is screwed onto the spacers).

LO5
Plastic rack 26x26x500 mm, for gates weighing up to 400 kg.

Pc/pack 10

ROA6
M4 25x20x1000 mm slotted nylon rack with metal insert for gates weighing up to 500 kg.

Pc/pack 10

ROA7
M4 rack, zinc coated, 22x22x1000 mm.

Pc/pack 10

ROA8
M4 rack, 30x8x1000 mm, zinc coated with spacers and screws.

Pc/pack 10

ROA81
M6 rack, 30x30x1000 mm, zinc coated.

Pc/pack 1

Nice recommends customers order products in pallets in order to facilitate storage and delivery, and ensure packs are uniform. The number of packs per single pallet has been specified for this reason. Approximate draft.

Barrier gate operator systems

4|11 The Nice World

12|65 Systems for swing gates

66|85 Systems for sliding gates

86|109 Barrier gate operator systems

110|137 Systems for garage and industrial doors

138|179 Control systems

180|205 Accessories

206|225 Control units

226|229 Product code alphabetical index

NiceBar System

90|91 L -Bar
92|95 M -Bar
96|97 S -Bar

100|101 X-Bar
102|105 Signo
106|109 Wil

Nice S/M/L Bar

Integrated solutions for all requirements.
New range of barrier gate operators to control road access to car parks, industrial, private and block of flats transit areas, including high traffic ones.

5 models in 3 standard versions, up to 7 modular bars from 3 to 9 m.

Easy transport and optimised management in the warehouse.

Solemyo system

The solar power kit Solemyo to automate gates, garage doors or barrier gates, including those located far from the power mains.

Opera system

The innovative Opera system enables the installer to manage, program and control automation systems, also remotely, simply and safely.

Guide to the selection and composition of bars and accessories

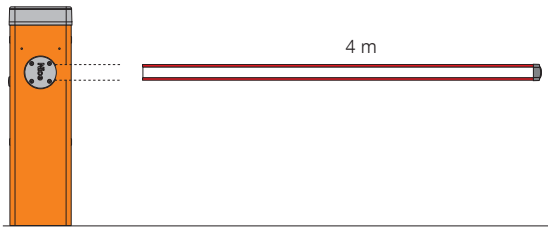

SBAR

- **With specific 4 m bar**
  Provision for:
  protective rubber trim
  and indicator lights

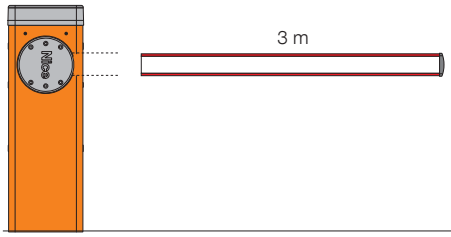

M3BAR

- **With 3 m bar**
  Provision for:
  protective rubber trim
  and indicator lights

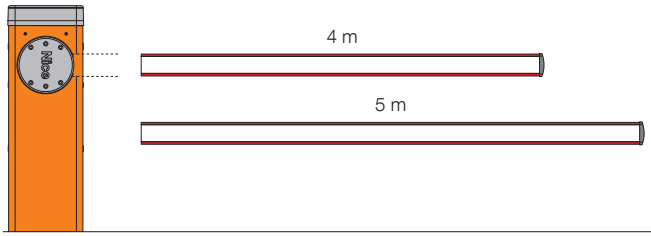

M5BAR

- **With 4 m bar**
  Provision for:
  protective rubber trim,
  indicator lights,
  rack, mobile stand
- **With 5 m bar**
  Provision for:
  protective rubber trim
  and indicator lights

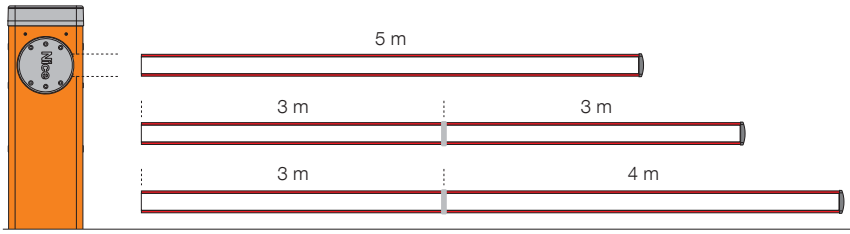

M7BAR

- **With 5 m bar**
  Provision for:
  protective rubber trim, indicator lights,
  rack, mobile stand
- **With bar up to 6 m (3+3 m)***
  Provision for:
  protective rubber trim, indicator lights,
  rack, mobile stand
- **With bar up to 7 m (3+4 m)***
  Provision for:
  protective rubber trim
  and indicator lights

*Use **XBA9** joint to assemble bars

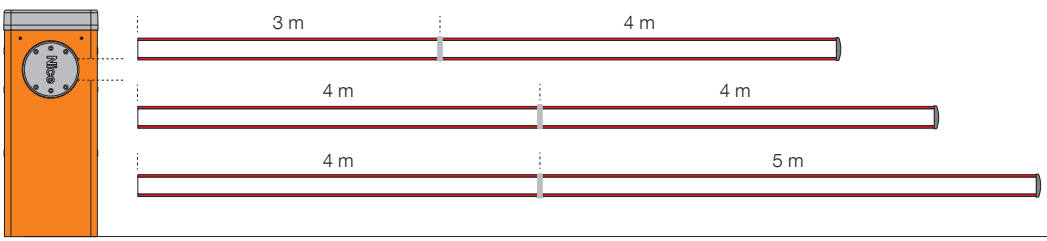

LBAR

- **With bar of 7 m (3+4 m)***
  Provision for:
  protective rubber trim, indicator lights,
  rack, mobile stand
- **With bar of 8 m (4+4 m)***
  Provision for:
  protective rubber trim, indicator lights,
  rack, mobile stand
- **With bar of 9 m (4+5 m)***
  Provision for:
  protective rubber trim
  and indicator lights

*Use **XBA9** joint to assemble bars

Nice L-Bar

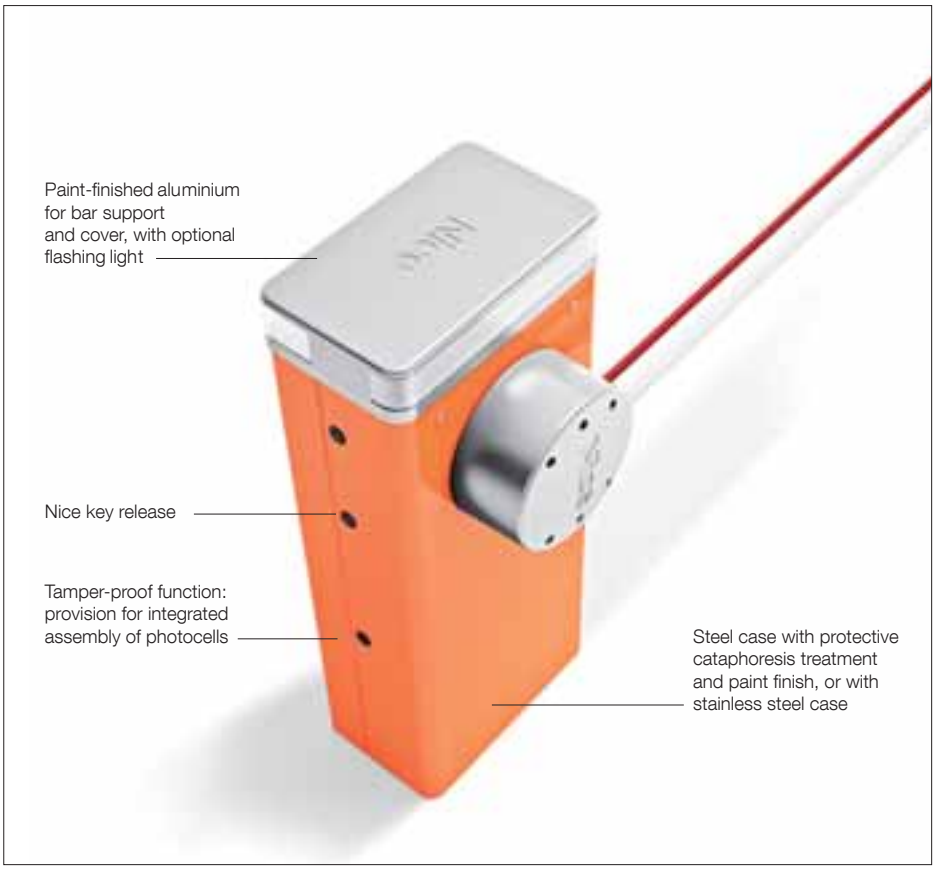

For bars up to 9 m, irreversible 230 Vac, 24 Vdc motor, with foundation plate:

Code	Description
LBAR	With steel case with protective cataphoresis treatment and paint finish
LBARI	With stainless steel case

Technical specifications

Code	LBAR	LBARI
Electrical data		
Power supply (Vac 50/60 Hz)	230	
Absorption (A)	1.3	
Power (W)	160	
Performance data		
Speed (s)	8 ÷ 12	
Torque (Nm)	400	
Work cycle (cycles/hour)	150	
Dimensional and general data		
Protection level (IP)	44	
Working temp. (°C Min/Max)	-20 ÷ +50	
Dimensions (mm)	500x299x1215 h	
Weight (kg)	98	

Electromechanical road barrier system for control of road access.

24 Vdc gear motor with built-in control unit and loop detector.

Powerful and fast, for bars from 7 to 9 m.

Modular: bars of 7, 8 and 9 metres are easily assembled using the aluminium expansion joint.

Possibility for intelligent control of two opposing automations thanks to **"master/slave" function**.

Strength and reliability: robust structure in steel, new high strength balancing springs guaranteed up to 1,000,000 opening and closing operations and elliptical section bar with high wind-gust resistance.

Optional flashing or traffic light can be integrated in cover.

Encoder movement control and electromechanical limit switches.

More comfort and safety in programming and maintenance phases: the separate enclosures for electronics and mechanics protect internal parts from potential risks.

Rapid and easy access to the control unit located in the upper section of the barrier body.

Simple fixture of the completely concealed photocells onto the specially designed seats on the barrier body.

More safety and reliability: obstacle detection and monitoring of motor absorption during automation movement.

Automatic fault diagnostics during operation with consequent signalling of fault type through specific flash sequences.

Provision for connection of latest generation optical and resistive sensitive edges (with 8.2 KOhm resistance).

Energy saving: the system sets to standby when not in use to save consumption.

No blackouts: emergency backup power with the optional batteries housed inside the case.

Release from side with metal key, can be installed on either side.

Nice recommends customers order products in pallets in order to facilitate storage and delivery, and ensure packs are uniform. The number of packs per single pallet has been specified for this reason. Approximate draft.

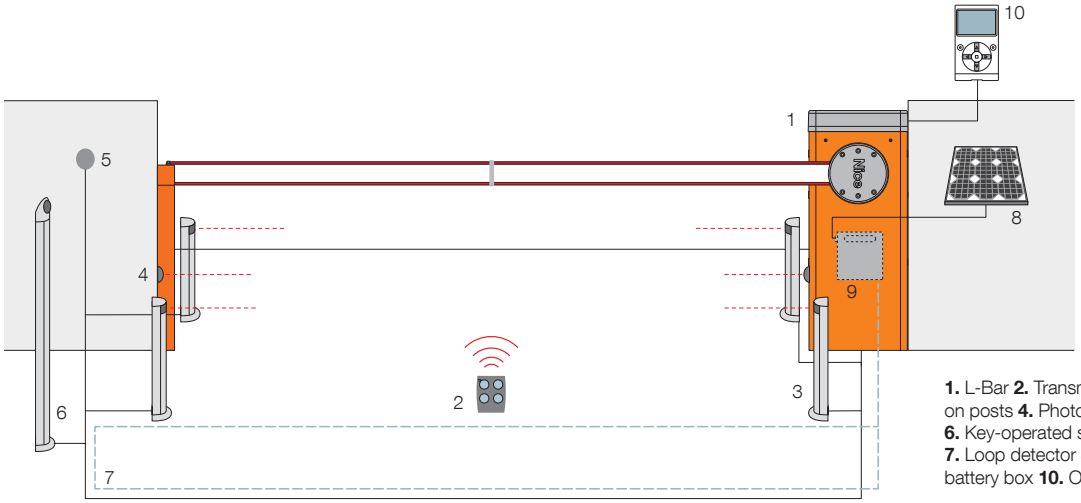

1. L-Bar **2.** Transmitter **3.** Photocells mounted on posts **4.** Photocells **5.** Digital or key switches **6.** Key-operated selector or digital on post **7.** Loop detector **8.** SYP* solar panel **9.** PSY24* battery box **10.** O-View* multifunction display.

*Optional connection to Solemyo and Opera systems.

Accessories

XBA3
Spare control unit.

Pc/pack 1

PS224
24 Vdc buffer batter.

Pc/pack 1

XBA15
White paint-finished aluminium bar 69x92x3150 mm.

Pc/pack 1

XBA14
White paint-finished aluminium bar 69x92x4150 mm

.

Pc/pack 1

XBA5
White paint-finished aluminium bar 69x92x5150 mm.

Pc/pack 1

XBA9
Expansion joint.

Pc/pack 1

XBA13
Rubber impact protection strip. Length 1 m.

Pc/pack 9

WA10
Red adhesive reflector strips.

Pc/pack 24

XBA18
Indicator lights for click fixture on upper or lower side of bar. Length 8 m.

Pc/pack 1

XBA8
Integrable traffic light.

Pc/pack 1

XBA7
Integrable flashing light.

Pc/pack 1

WA13
Aluminium rack up to 2 m.

Pc/pack 1

XBA17
Anchorage base with clamps, for LBAR.

Pc/pack 1

WA12
Mobile stand for bars - *New fully reinforced version*.

Pc/pack 1

WA11
Adjustable stand for bars.

Pc/pack 1

Nice M-Bar

NEW | Sole myo | Opera | Blue BUS | 24V

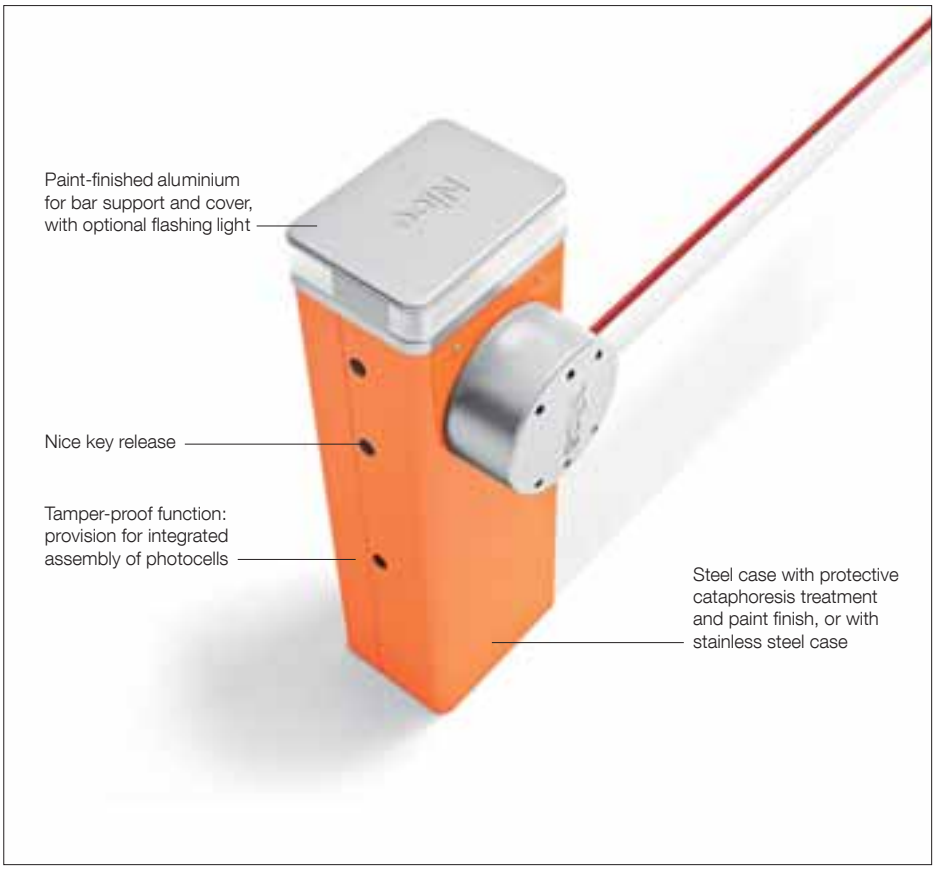

With bar up to 3 m, irreversible 230 Vac, 24 Vdc motor, with foundation plate:

Code	Description
M3BAR	With steel case with protective cataphoresis treatment and paint finish
M3BARI	With stainless steel case

With bar up to 4 or 5 m, irreversible 230 Vac, 24 Vdc motor, with foundation plate:

Code	Description
M5BAR	With steel case with protective cataphoresis treatment and paint finish
M5BARI	With stainless steel case

With bar up to 5, 6 or 7 m, irreversible 230 Vac, 24 Vdc motor, with foundation plate:

Code	Description
M7BAR	With steel case with protective cataphoresis treatment and paint finish
M7BARI	With stainless steel case

Electromechanical road barrier system for control of road access.

24 Vdc gear motor with built-in control unit and loop detector.

For bars up from 3 to 7 m.

Practical installation: bars of 7, 8 and 9 metres are easily assembled using the aluminium expansion joint.

Possibility for intelligent control of two opposing automations thanks to **"master/slave" function**.

Strength and reliability: robust structure in steel, new high strength balancing springs guaranteed up to 1,000,000 opening and closing operations and elliptical section bar with high wind-gust resistance.

Optional flashing or traffic light can be integrated in cover.

Encoder movement control and electromechanical limit switches.

More comfort and safety in programming and maintenance phases: the separate enclosures for electronics and mechanics protect internal parts from potential risks.

Rapid and easy access to the control unit located in the upper section of the barrier body.

Simple fixture of the completely concealed photocells onto the specially designed seats on the barrier body.

More safety and reliability: obstacle detection and monitoring of motor absorption during automation movement.

Automatic fault diagnostics during operation with consequent signalling of fault type through specific flash sequences.

Provision for connection of latest generation optical and resistive sensitive edges (with 8.2 KOhm resistance).

Energy saving: the system sets to standby when not in use to save consumption.

No blackouts: emergency backup power with the optional batteries housed inside the case.

Release from side with metal key, can be installed on either side.

Technical specifications

Code	M3BAR	M3BARI	M5BAR	M5BARI	M7BAR	M7BARI
Electrical data						
Power supply (Vac 50/60 Hz)	230					
Power supply (Vdc)	24					
Absorption (A)	1.3		1.1		1.1	
Power (W)	150		110		110	
Performance data						
Speed min.÷max. (s)	1.5 ÷ 4		3 ÷ 6		6 ÷ 10	
Torque (Nm)	100		200		300	
Work cycle (cycles/hour)	500		350		200	
Dimensional and general data						
Protection level (IP)	44					
Working temp. (°C Min/Max)	-20 ÷ +50					
Dimensions (mm)	400x299x1215 h					
Weight (kg)	80				85	

Nice recommends customers order products in pallets in order to facilitate storage and delivery, and ensure packs are uniform. The number of packs per single pallet has been specified for this reason. Approximate draft.

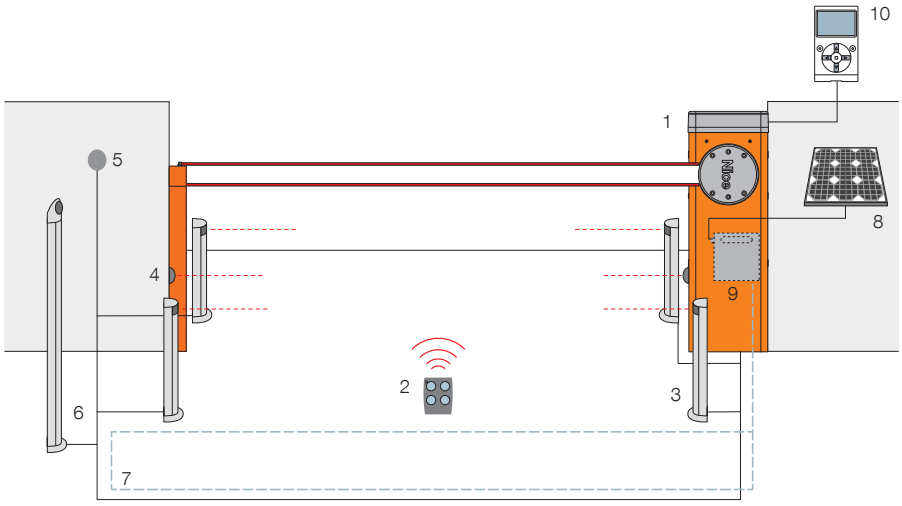

1. M-Bar **2.** Transmitter **3.** Photocells mounted on posts **4.** Photocells **5.** Digital or key switches **6.** Key-operated selector or digital on post **7.** Loop detector **8.** SYP* solar panel **9.** PSY24* battery box **10.** O-View* multifunction display.

*Optional connection to Solemyo and Opera systems.

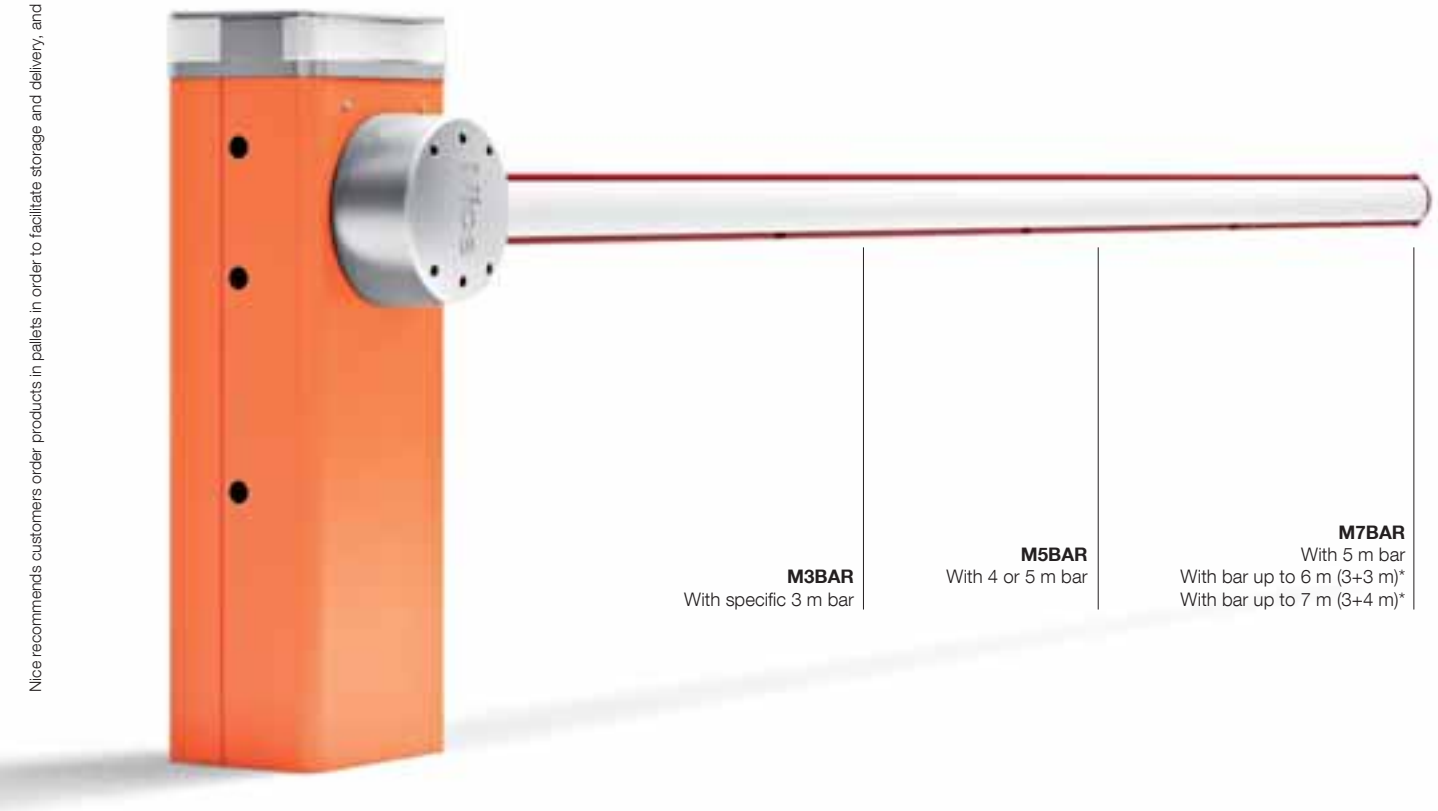

M3BAR
With specific 3 m bar

M5BAR
With 4 or 5 m bar

M7BAR
With 5 m bar
With bar up to 6 m (3+3 m)*
With bar up to 7 m (3+4 m)*

*Use XBA9 joint to assemble bars

Nice Accessories M-Bar

Accessories for M3BAR, M5BAR, M7BAR

XBA3
Spare control unit.

Pc/pack 1

PS224
24 Vdc buffer batter.

Pc/pack 1

XBA13
Rubber impact protection strip. Length 1 m.

Pc/pack 9

WA10
Red adhesive reflector strips.

Pc/pack 24

XBA8
Integrable traffic light.

Pc/pack 1

XBA7
Integrable flashing light.

Pc/pack 1

XBA16
Anchorage base with clamps, for MBAR.

Pc/pack 1

WA11
Adjustable stand for bars.

Pc/pack 1

Accessories for M3BAR

XBA15
White paint-finished aluminium bar 69x92x3150 mm.

Pc/pack 1

XBA4
Indicator lights for click fixture on upper or lower side of bar. Length 4 m.

Pc/pack 1

XBA10
Pivoting connection for bars up to 4 m.

Pc/pack 1

XBA11
Joint for bars XBA15 (from 1950 mm to 2400 mm).

Pc/pack 1

Nice recommends customers order products in pallets in order to facilitate storage and delivery, and ensure packs are uniform. The number of packs per single pallet has been specified for this reason. Approximate draft.

XBA14
White paint-finished aluminium bar 69x92x4150 mm

Pc/pack 1

XBA5
White paint-finished aluminium bar 69x92x5150 mm.

Pc/pack 1

XBA4
Indicator lights for click fixture on upper or lower side of bar. Length 4 m.

Pc/pack 1

XBA6
Indicator lights for click fixture on upper or lower side of bar. Length 6 m.

Pc/pack 1

XBA10
Pivoting connection for bars up to 4 m.

Pc/pack 1

XBA11
Joint for bars XBA15 (from 1950 mm to 2400 mm).

Pc/pack 1

WA12
Mobile stand for bars - *New fully reinforced version*.

Pc/pack 1

WA13
Aluminium rack up to 2 m.

Pc/pack 1

XBA15
White paint-finished aluminium bar 69x92x3150 mm.

Pc/pack 1

XBA14
White paint-finished aluminium bar 69x92x4150 mm

Pc/pack 1

XBA5
White paint-finished aluminium bar 69x92x5150 mm.

Pc/pack 1

XBA9
Expansion joint.

Pc/pack 1

XBA6
Indicator lights for click fixture on upper or lower side of bar. Length 6 m.

Pc/pack 1

XBA18
Indicator lights for click fixture on upper or lower side of bar. Length 8 m.

Pc/pack 1

WA12
Mobile stand for bars - *New fully reinforced version*.

Pc/pack 1

WA13
Aluminium rack up to 2 m.

Pc/pack 1

Nice S-Bar

NEW | Sole myo | Opera | Blue BUS | 24V

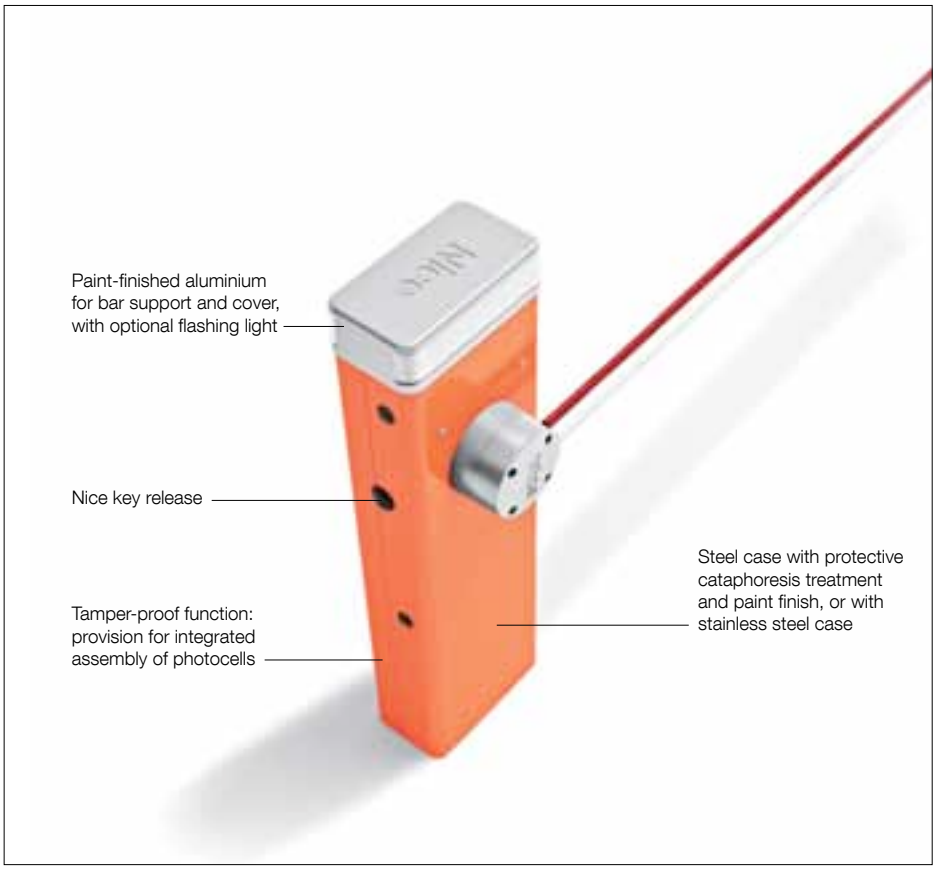

With bar up to 4 m, irreversible 230 Vac, 24 Vdc motor, with foundation plate:

Code	Description
SBAR	With steel case with protective cataphoresis treatment and paint finish
SBARI	With stainless steel case

Electromechanical road barrier system for control of road access.

24 Vdc gear motor
with built-in control unit.

For bar up to 4 m.

Strength and reliability: robust structure in steel, new high strength balancing springs guaranteed up to 1,000,000 opening and closing operations and elliptical section bar with high wind-gust resistance.

Optional flashing or traffic light can be integrated in cover.

More comfort and safety in programming and maintenance phases: the separate enclosures for electronics and mechanics protect internal parts from potential risks.

Rapid and easy access to the control unit located in the upper section of the barrier body.

Simple fixture of the completely concealed photocells onto the specially designed seats on the barrier body.

More safety and reliability: obstacle detection and monitoring of motor absorption during automation movement.

Automatic fault diagnostics during operation with consequent signalling of fault type through specific flash sequences.

Provision for connection of latest generation optical and resistive sensitive edges (with 8.2 KOhm resistance).

Energy saving: the system sets to standby when not in use to save consumption.

No blackouts: emergency backup power with the optional batteries housed inside the case.

Release from side with Nice triangular key, can be installed on either side.

Technical specifications

Code	SBAR	SBARI
Electrical data		
Power supply (Vac 50/60 Hz)	230	
Power supply (Vdc)	24	
Absorption (A)	1	
Power (W)	300	
Performance data		
Speed (s)	<4	
Torque (Nm)	100	
Work cycle (cycles/hour)	100	
Dimensional and general data		
Protection level (IP)	44	
Working temp. (°C Min/Max)	-20 ÷ +50	
Dimensions (mm)	330x180x1180 h	
Weight (kg)	46	

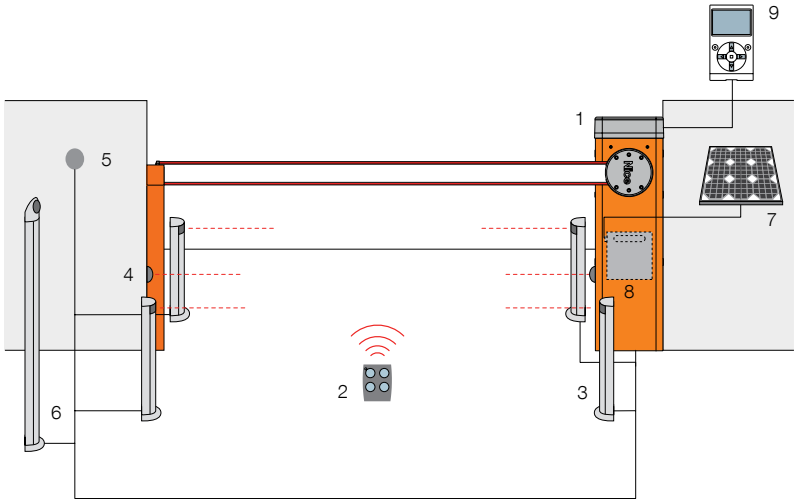

1. S-Bar **2.** Transmitter **3.** Photocells mounted on posts **4.** Photocells **5.** Digital or key switches **6.** Key-operated selector or digital on post **7.** SYP* solar panel **8.** PSY24* battery box **9.** O-View* multifunction display.

*Optional connection to Solemyo and Opera systems.

Accessories

XBA20
Spare control unit for SBAR.

Pc/pack 1

PS124
24 V battery with integrated battery charger.

Pc/pack 1

XBA19
White paint-finished aluminium bar 45x58x4000 mm.

Pc/pack 1

XBA13
Rubber impact protection strip. Length 1 m.

Pc/pack 9

WA10
Red adhesive reflector strips.

Pc/pack 24

SIA1
Anchorage base with clamps.

Pc/pack 1

XBA7
Integrable flashing light.

Pc/pack 1

XBA4
Indicator lights for click fixture on upper or lower side of bar. Length 4 m.

Pc/pack 1

WA11
Adjustable stand for bars.

Pc/pack 1

Nice recommends customers order products in pallets in order to facilitate storage and delivery, and ensure packs are uniform. The number of packs per single pallet has been specified for this reason. Approximate draft.

Nice Selection guide

Follow the arrow and choose the right product

Irreversible, built-in control unit, with BlueBUS technology and incorporated flashing light. Compatible for operation with Solemyo and Opera.
X-Bar
pages 100/101

→ modular pole in three 1-metre sections with protective rubber strips → **X-BAR**

Irreversible, with built-in control unit and magnetic encoder.
Signo
pages 102/105

- bar length up to 3 m, minimum opening time: 1.8 s
  - galvanised steel, painted case → **SIGNO3**
  - satin stainless steel case → **SIGNO3I**
- bar length up to 4 m, minimum opening time: 3 s
  - galvanised steel, painted case → **SIGNO4**
  - satin stainless steel case → **SIGNO4I**
- bar length up to 6 m (8.5 m with accessory), minimum opening time: 6 s
  - galvanised steel, painted case → **SIGNO6**
  - satin stainless steel case → **SIGNO6I**

Irreversible, with built-in control unit.
Wil
pages 106/109

- bar length up to 4 m, minimum opening time: 3.5 s
  - galvanised steel, painted case → **WIL4**
  - satin stainless steel case → **WIL4I**
- bar length up to 6 m (8 m with accessory), minimum opening time: 5 s
  - galvanised steel, painted case → **WIL6**
  - satin stainless steel case → **WIL6I**

X-Bar

Signo

Wil

Nice X-Bar

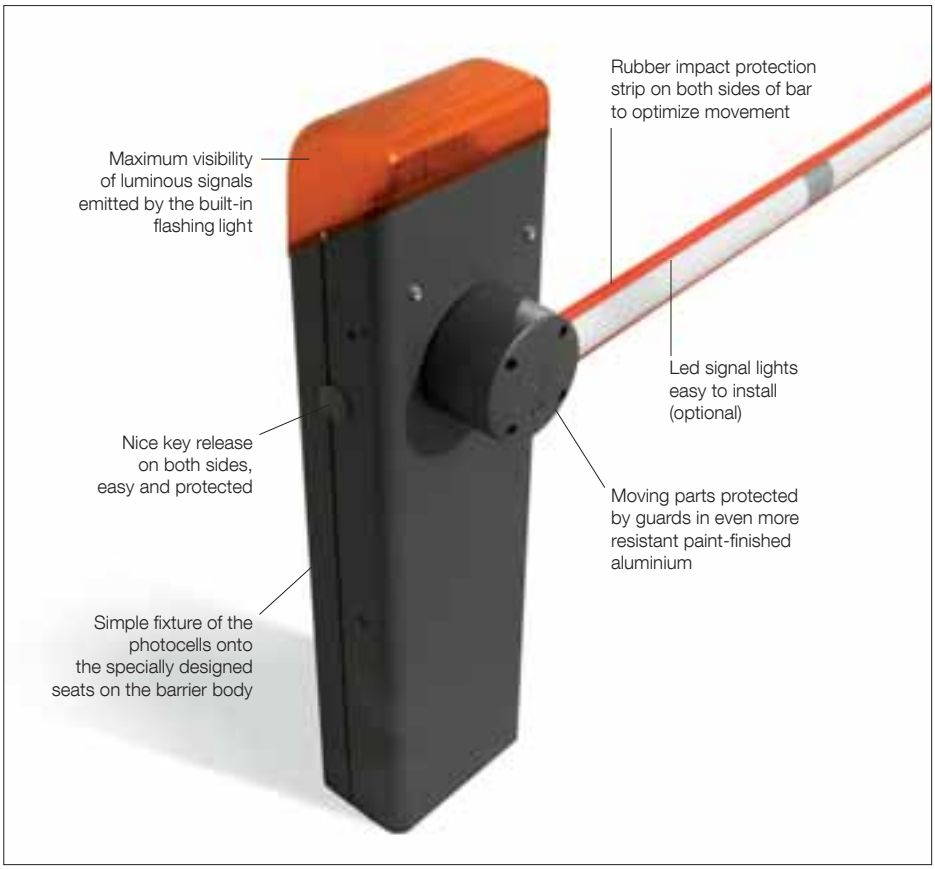

Code	Description
X-BAR	Irreversible 230 Vac, 24 Vdc motor. Modular pole in three 1-metre sections with rubber protection strips; enclosure in galvanized and paint-finished steel, fixing plate excluded

The electromechanical barrier gate in kit form for control of road access.

24 Vdc gear motor, control unit, with Nice BlueBUS technology and built-in flashing light.

Powerful and fast: electromechanical gear motor 24 Vdc, 100 W with power up to 100 Nm of torque.

Flexible and easy to transport: modular pole in three 1-metre sections to adapt length to the specific installation environments; including joints and cap. The compact dimensions of packaging facilitate the transport of X-Bar.

Built-in control unit, with flashing light to guarantee optimal visibility of the luminous signal.

More comfort and safety in programming and maintenance phases: the separate enclosures for electronics and mechanics protect internal parts from potential risks.

Rapid and easy access to the control unit located in the upper section of the barrier body.

Simple fixture of the photocells onto the specially designed seats on the barrier body.

More safety and reliability: obstacle detection and monitoring of motor absorption during automation movement. Automatic fault diagnostics during operation and consequent information on type via different combinations of flashes.

With provision for connection of the latest generation of optical and resistive sensitive edges (with 8.2 KOhm resistance).

Energy saving: when the system is not used it sets to standby, thereby reducing consumption.

No black out: operation in the event of a power failure with optional batteries (PS124) housed inside the motor.

Technical specifications

Code	**X-BAR**
Electrical data	
Power supply (Vac 50/60 Hz)	230
Absorption (A)	0.7
Power (W)	100
Performance data	
Speed (s)	< 4
Torque (Nm)	100
Work cycle (cycles/hour)	100
Dimensional and general data	
Protection level (IP)	44
Working temp. (°C Min/Max)	-20 ÷ +50
Dimensions (mm)	300x179.5x1146 h
Weight (kg)	40

Nice recommends customers order products in pallets in order to facilitate storage and delivery, and ensure packs are uniform. The number of packs per single pallet has been specified for this reason. Approximate draft.

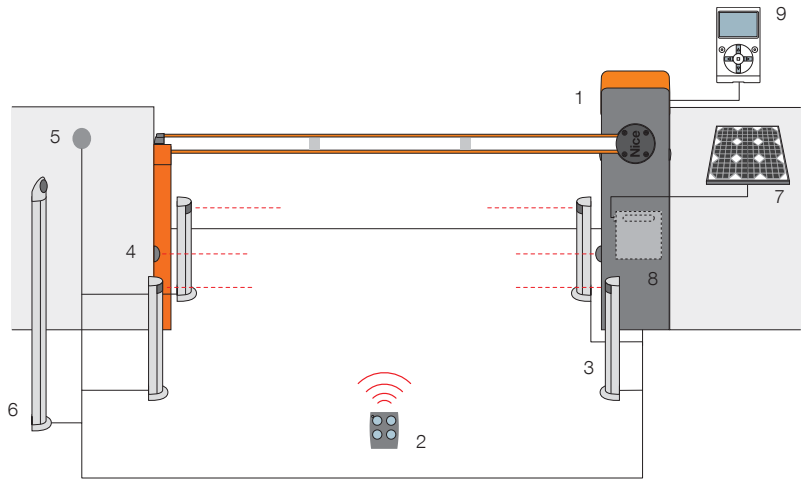

1. X-Bar **2.** Transmitter **3.** Photocells mounted on posts **4.** Photocells **5.** Digital or key switches **6.** Key-operated selector or digital on post **7.** SYP* solar panel 8. PSY24* battery box **9.** O-View* multifunction display.

*Optional connection to Solemyo and Opera systems.

Accessories

XBA2
Spare control unit for X-BAR.

Pc/pack 1

PS124
24 V battery with integrated battery charger.

Pc/pack 1

SIA1
Anchorage base with clamps.

Pc/pack 1

XBA4
Indicator lights for click fixture of X-BAR on upper or lower side of pole.

Pc/pack 1

WA10
Red adhesive reflector strips.

Pc/pack 24

WA11
Adjustable stand for bars.

Pc/pack 1

Solemyo system

The solar power kit Solemyo to automate gates, garage doors or barrier gates, including those located far from the power mains and without the need for costly and invasive excavation work.
See pages 186/187

Opera system

The innovative Opera system enables the installer to manage, program and control automation systems, also remotely, simply and safely, with significant savings in time.
See pages 140/141

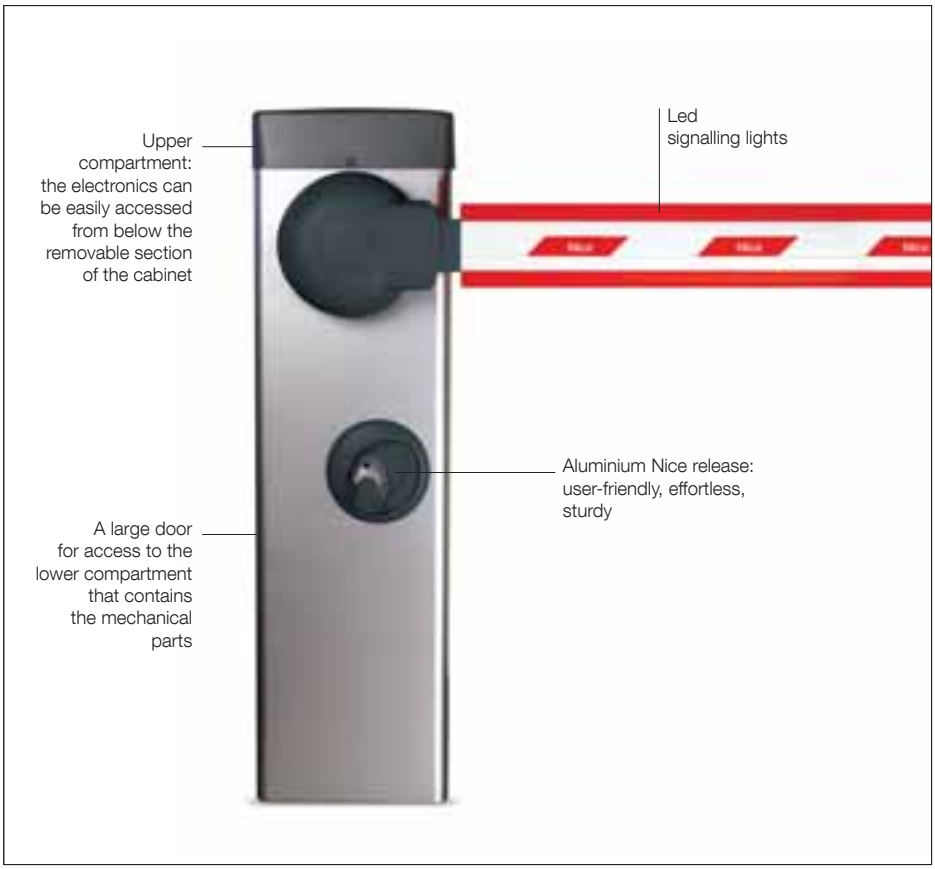

For private, public and industrial car parks.

Electromechanical barrier gate operator with encoder.

Powerful and quick: electromechanical 24 Vdc gear motor, 500 W power and up to 250 Nm torque.
It opens up completely (90°) in just 1.8 seconds (Signo3), 3 seconds (Signo4), 6 seconds (Signo6).
Models with a 230 Vac or 110 Vac power supply.

Even more sophisticated and well-developed control unit:
The same for all models, it automatically recognises and memorises the Signo model on which it is installed thereby eliminating the first installation procedure.
Signals that the power supply is correct when started and that the control unit is functioning correctly.
Automatic diagnostics during operation, with differentiated visual signals according to the type of fault.

Intelligent: the manoeuvre will invert automatically if the bar comes into contact with an obstacle.
The control unit automatically corrects any eventual lack of balance linked to variations in the climate or poor installation.

Safe: the innovative control unit utilises a revolutionary management system of the force, speed, acceleration and deceleration that can be **programmed at 6 levels**, at the beginning and at the end of the manoeuvre.
Programming is intuitive and automatic with the Nice Encoder technology: simply push a button and Signo will comprehend the limit switch limits.

Large openings: a master/slave selection automatically synchronises two opposing barriers enabling the automation of transit points up to 8 and 12 m.

Convenient: separate compartments for electronics and mechanics provide the user with easy access without damages to internal parts.

Exclusive functions:
- the barrier will close immediately after the vehicle has passed through;
- it has two types of traffic-light type signals;
- there is an automatic safety test at the beginning of each manoeuvre;
- constant resistance STOP input for connecting the latest generation of sensitive edges;
- there is a manoeuvre counter and it is possible to programme the maintenance alarm threshold.

Intensive use for long periods of time:
Ideal for automating private, public or industrial car-parks which are subjected to the frequent passage of vehicles during the day.

Irreversible 230 Vac, 24 Vdc motor, with anchorage base included:

Code	Description
SIGNO3	For bars up to 3 m, with galvanised steel painted case
SIGNO3I	For bars up to 3 m, with satin stainless steel case
SIGNO4	For bars up to 4 m, with galvanised steel painted case
SIGNO4I	For bars up to 4 m, with satin stainless steel case
SIGNO6	For bars up to 6 m, with galvanised steel painted case
SIGNO6I	For bars up to 6 m, with satin stainless steel case

Technical specifications

Code	SIGNO3 - SIGNO3I	SIGNO4 - SIGNO4I	SIGNO6 - SIGNO6I
Electrical data			
Power supply (Vac 50/60 Hz)	230		
Absorption (A)	1.1	1.3	1.3
Power (W)	300	300	500
Performance data			
Min.÷max. opening time (s)	1.8÷4	3÷6	6÷10
Torque (Nm)	130	200	250
Work cycle (cycles/hour)	600	400	250
Dimensional and general data			
Protection level (IP)	44		
Working temp. (°C Min/Max)	-20 ÷ +50		
Dimensions (mm)	320x200x1070 h		420x220x1070 h
Weight (kg)	50		58

Nice recommends customers order products in pallets in order to facilitate storage and delivery, and ensure packs are uniform. The number of packs per single pallet has been specified for this reason. Approximate draft.

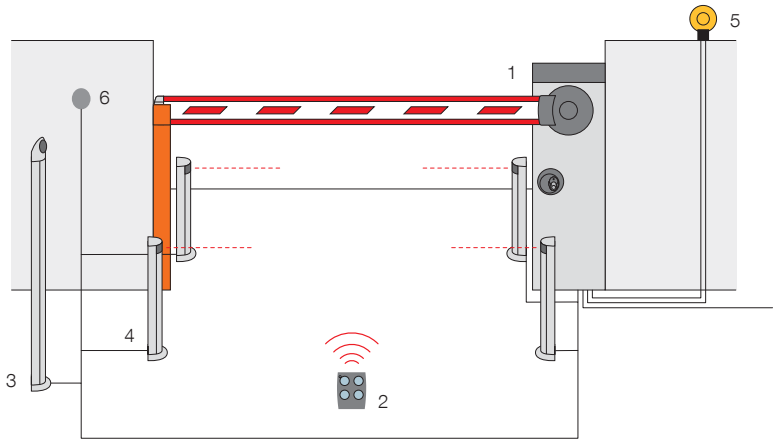

1. Signo **2.** Transmitter **3.** Key-operated selector on post **4.** Photocells mounted on posts **5.** Flashing light **6.** Digital or key switches.

Utilisation limits

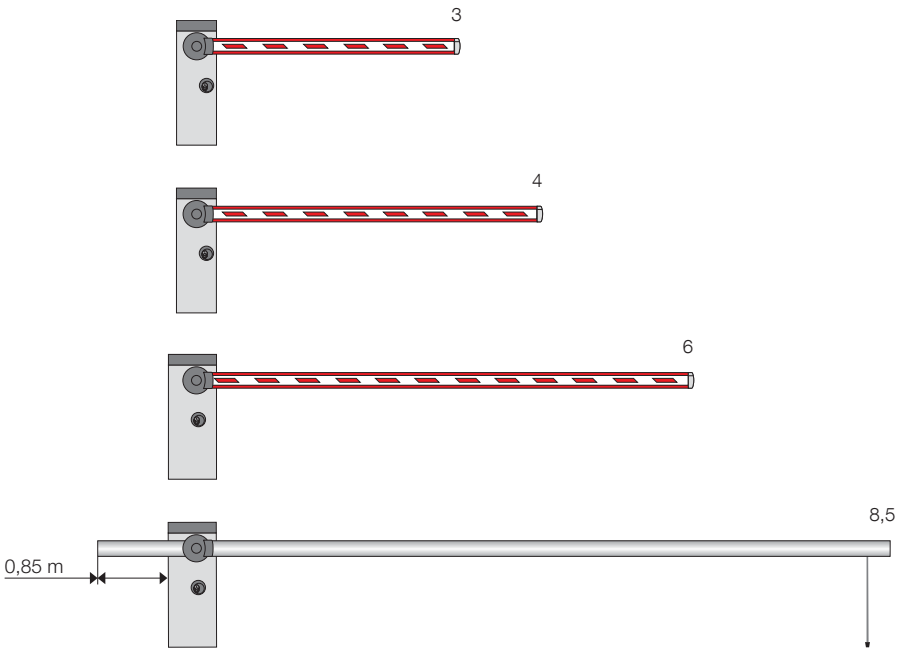

SIGNO3 / SIGNO3I up to 3 m
fully accessoried bar without rack and mobile stands, with limits to speed.

SIGNO4 / SIGNO4I up to 4 m
fully accessoried bar up to 3.75 m.

SIGNO6 / SIGNO6I up to 6 m
bar with complete set of accessories with limits to speed.

SIGNO6 / SIGNO6I up to 8.5 m
with WA24 (bar) without accessories, equipped with mobile stand, with limits to speed.

Bar lenght (m)

Tubular aluminium bars don't need the use of accessories (only WA11).

Nice Accessories Signo

Accessories for SIGNO3 / SIGNO3I

SIA3
Aluminium bar, painted white 36x73x3250 mm.

Pc/pack 1

WA25
Pivoting connection for rectangular bars up to 4 m.

Pc/pack 1

WA2
8 m pack of red shockproof rubber strip with caps to close SIA3 bar.

Pc/pack 1

SIA1
Anchorage base with clamps.

Pc/pack 1

Accessories for SIGNO4 / SIGNO4I

WA1
Aluminium bar, painted white 36x73x4250 mm.

Pc/pack 1

WA25
Pivoting connection for rectangular bars up to 4 m.

Pc/pack 1

WA2
8 m pack of red shockproof rubber strip with caps to close WA1 bar.

Pc/pack 1

WA13
Aluminium rack (2 m) for WA1, WA21, WA22 bars.

Pc/pack 1

WA14
Joint for rods WA1 (from 1950 mm to 2400 mm).

Pc/pack 1

WA3
Tubular aluminium bar, painted white
Ø 70x4250 mm, suitable where there are strong winds. Only with WA11.

Pc/pack 1

WA4
Connection for the WA3 bar.

Pc/pack 1

SIA1
Anchorage base with clamps.

Pc/pack 1

Accessories for SIGNO6 / SIGNO6I

WA21
Aluminium bar, painted white 36x94x6250 mm.

Pc/pack 1

WA22
Modular bar, plus joint painted white, 2 sections 36x94x3125 mm.

Pc/pack 2

WA6
Pack 12 m of red shockproof rubber strip with caps to close the bars WA21, WA22.

Pc/pack 1

WA24
Tubular telescopic bar in white painted aluminium, max. length 8.5 m, complete with mobile support WA12, counterweight and connector.
6 meters overall length for transportation.
See draft page 103.
Pc/pack 1

WA7
Tubular aluminium bar, painted white
Ø 90x6250 mm suitable where there are strong winds, only with WA11.

Pc/pack 1

Accessories for SIGNO6 / SIGNO6I

WA8
Connection
for the WA7 bar.

Pc/pack 1

WA13
Aluminium rack (2 m)
for WA1, WA21, WA22
bars.

Pc/pack 1

SIA2
Anchorage base
with clamps.

Pc/pack 1

Common accessories

SIA20
Spare control unit.

PS224
24 Vdc buffer battery.

Pc/pack 1

WA9
Pack of 6 flashing signals,
wired for WA1, WA21,
WA22 bars.

Pc/pack 6

WA10
Red adhesive
reflector strips.

Pc/pack 24

WA11
Adjustable stand
for bars.

Pc/pack 1

WA12
Mobile stand for bars
- *New fully reinforced version*.

Pc/pack 1

PO
Support bracket
for photocells Bf, FE.

Pc/pack 4

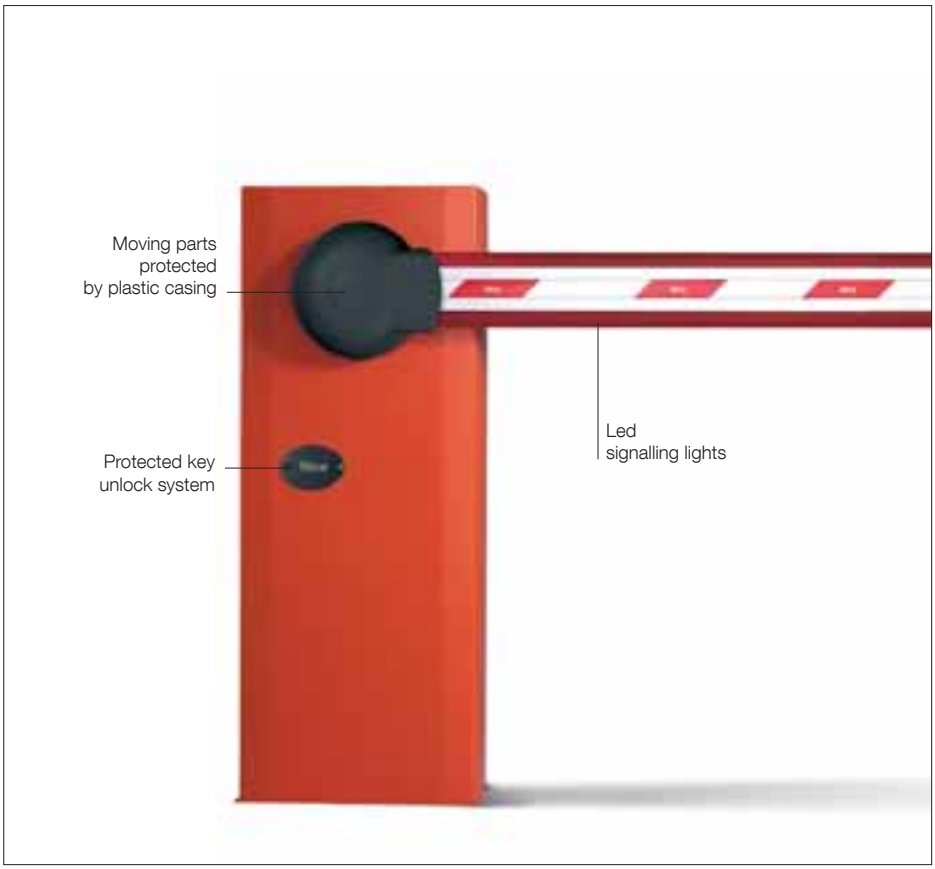

For private, public and industrial car parks.
Electromechanical barrier gate, 24 Vdc, with adjustable speed and anti-crushing safety feature. Intensive use.

Four versions:
up to 4 m (WIL4, WIL4I),
up to 6 m (WIL6, WIL6I).

Galvanised steel, painted case or AISI 304 (WIL4I, WIL6I).

Incorporated control unit, can be removed, making wiring and maintenance easier.

Easy to install: the bar can be assembled on either the right or left hand side indifferently.

Easy to balance:
linear adjustment of the spring.

The system will operate during a blackout by means of internally fitted, rechargeable batteries.
The limit switches for slowdown during both opening and closing can be adjusted both mechanically and electronically.

Speed can be electronically adjusted:
WIL4, 3.5 second minimum opening time;
WIL6, 5 second opening time.

Anti-crush safety feature
on opening and closing.

Painted aluminium bar profile:
easy to assemble the signalling lights and pneumatic edge.

Led signalling lights:
highly efficient and long-lasting.

Protected simple key-operated release.

Irreversible 230 Vac, 24 Vdc motor, with anchorage base included:

Code	Description
WIL4	For bars up to 4 m, with galvanised steel painted case
WIL4I	For bars up to 4 m, with satin stainless steel case
WIL6	For bars up to 6 m, with galvanised steel painted case
WIL6I	For bars up to 6 m, with satin stainless steel case

Technical specifications

Code	WIL4 - WIL4I	WIL6 - WIL6I
Electrical data		
Power supply (Vac 50/60 Hz)	230	
Absorption (A)	1.1	0.6
Power (W)	300	360
Performance data		
Minimum opening time (s)	3.5	5
Torque (Nm)	140	200
Work cycle (%)	80	
Dimensional and general data		
Protection level (IP)	54	
Working temp. (°C Min/Max)	-20 ÷ +50	
Dimensions (mm)	320x220x1000 h	420x220x1050 h
Weight (kg)	46	54

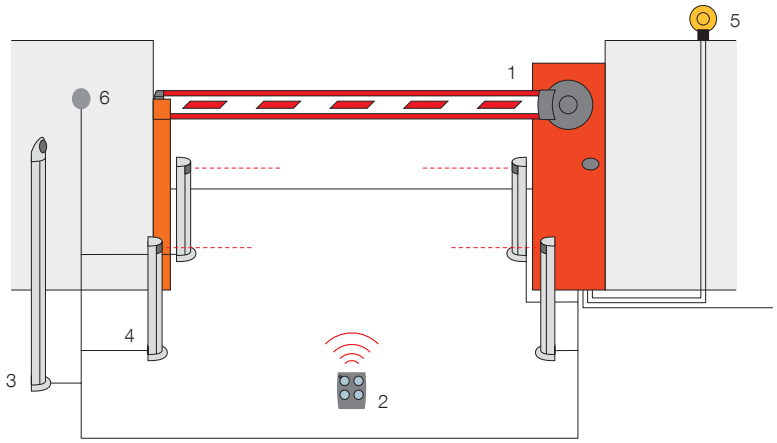

1. Wil **2.** Transmitter **3.** Selector key-operated on post **4.** Photocells mounted on posts **5.** Flashing light **6.** Digital or key switches.

Utilisation limits

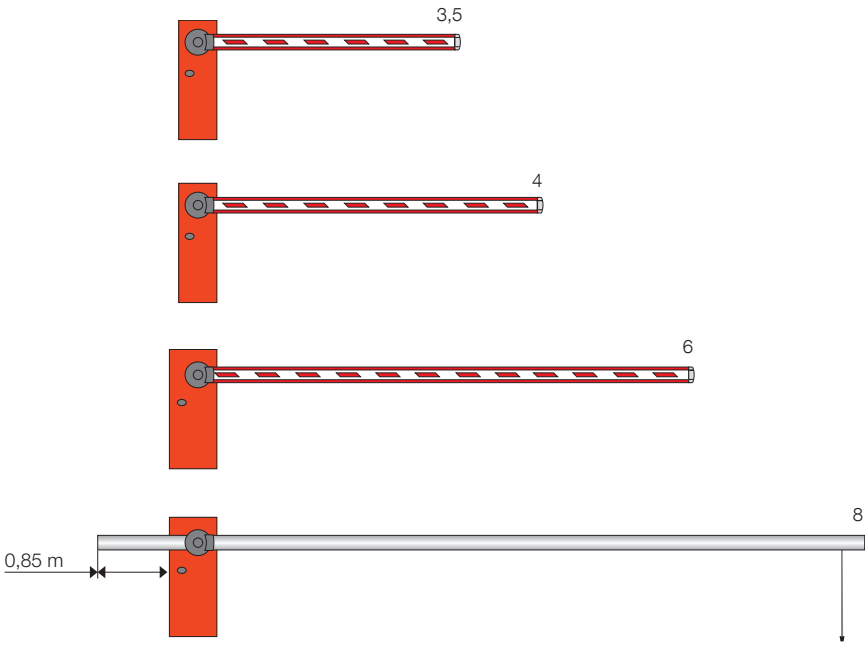

WIL4 / WIL4I up to 3.5 m
fully accessoried bar
without speed limit.

WIL4 / WIL4I up to 4 m
fully accessoried bar with speed limit and a WA13 rack max lenght of 2 m
or
4 m rack lenght without shockproof rubber strip WA2.

WIL6 / WIL6I up to 6 m
fully accessoried bar with speed limit and a WA13 rack max lenght of 4 m
or
WA13 rack lenght 6 m,
without shockproof rubber strip WA2.

WIL6 / WIL6I up to 8 m
with WA24 (bar without accessories), with no limits to speed.

Bar lenght (m)

Tubular aluminium bars don't need the use of accessories (only WA11).

Nice recommends customers order products in pallets in order to facilitate storage and delivery, and ensure packs are uniform. The number of packs per single pallet has been specified for this reason. Approximate draft.

Nice Accessories Wil

Accessories for WIL4 / WIL4I

WA1
Aluminium bar, painted white 36x73x4250 mm.

Pc/pack 1

WA25
Pivoting connection for rettangular bars up to 4 m.

Pc/pack 1

WA2
8 m pack of red shockproof rubber strip with caps to close WA1 bar.

Pc/pack 1

WA14
Joint for rods WA1 (from 1950 mm to 2400 mm).

Pc/pack 1

WA3
Tubular aluminium bar, painted white Ø 70x4250 mm, suitable where there are strong winds only with WA11.

Pc/pack 1

WA4
Connection for the WA3 bar.

Pc/pack 1

WA15
Anchorage base with clamps.

Pc/pack 1

Accessories for WIL6 / WIL6I

WA21
Aluminium bar, painted white 36x94x6250 mm.

Pc/pack 1

WA22
Modular bar, plus joint painted white, 2 sections 36x94x3125 mm.

Pc/pack 2

WA6
Pack 12 m of red, shockproof, rubber strip with caps to close the bars WA21, WA22.

Pc/pack 1

WA24
Tubular telescopic bar in white painted aluminium, max. length 8 m, complete with mobile support WA12, counterweight and connector. 6 m overall length for transportation. See draft page 107.
Pc/pack 1

WA7
Tubular aluminium bar, painted white Ø 90x6250 mm suitable where there are strong winds, only with WA11.

Pc/pack 1

WA8
Connection for the WA7 bar.

Pc/pack 1

WA16
Anchorage base with clamps.

Pc/pack 1

Common accessories

WA20
Spare control unit.

CARICA
Plug-in card
for battery charger.

Pc/pack 1

B12-B
12 V, 6 Ah batteries.

Pc/pack 1

WA9
Pack of flashing signals, wired for WA1, WA21, WA22 bars.

Pc/pack 6

WA10
Red adhesive
reflector strips.

Pc/pack 24

WA13
Aluminium rack (2 m)
for WA1, WA21, WA22 bars.

Pc/pack 1

WA11
Adjustable stand
for bars.

Pc/pack 1

WA12
Mobile stand for bars
- *New fully reinforced version*.

Pc/pack 1

PO
Support bracket
for photocells Bf, FE.

Pc/pack 4

Systems for garage and industrial doors

4|11 The Nice World

12|65 Systems for swing gates

66|85 Systems for sliding gates

86|109 Barrier gate operator systems

110|137 Systems for garage and industrial doors

138|179 Control systems

180|205 Accessories

206|225 Control units

226|229 Product code alphabetical index

For sectional and up-and-over doors	116|119	Spinbus
	120|121	SpinbusKit 20/21/22
	122|123	SpinbusKit 23
	124|125	SpinKit
For up-and-over and articulated doors	126|127	Ten
	128|129	TenKit
For sectional doors	130|131	Soon
	132|133	Sumo
For folding 2-leaf doors	134|135	Hyppo 7100
For balanced rolling doors	136|137	Rondo

Nice Selection guide

Follow the arrow and choose the right product

For sectional and up-and-over doors, built-in BlueBUS technology, also available in kit

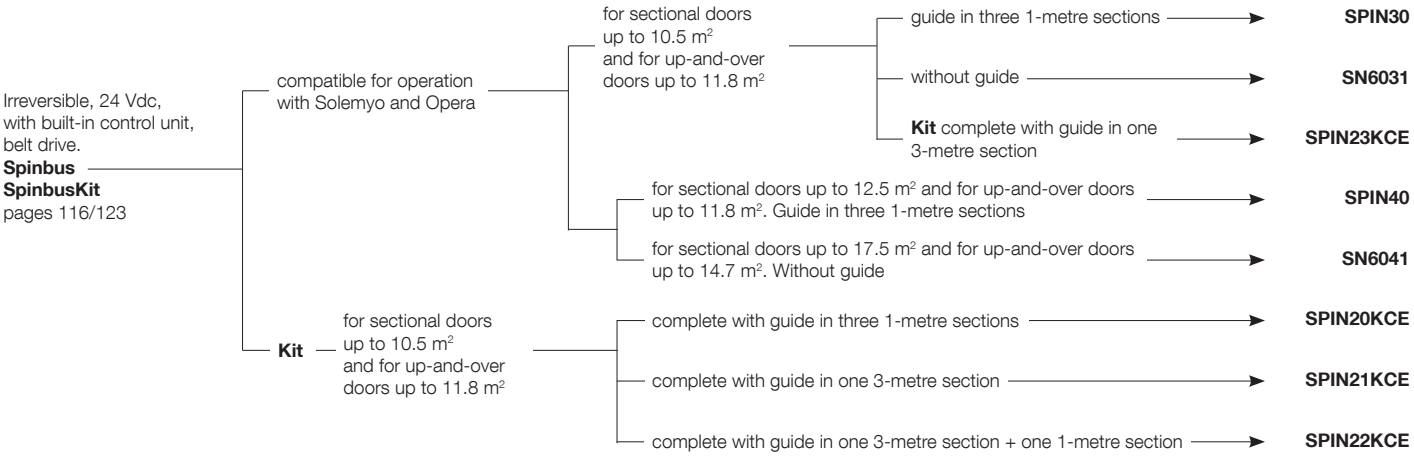

For sectional and up-and-over doors, in kit

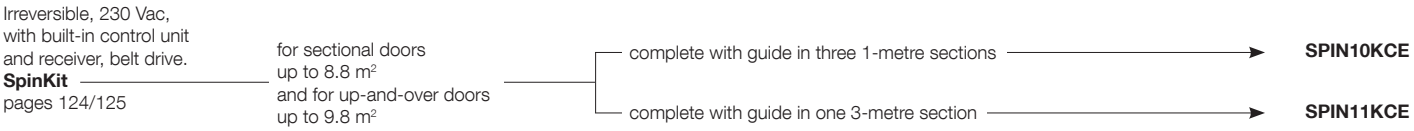

For up-and-over and articulated doors, also available in kit

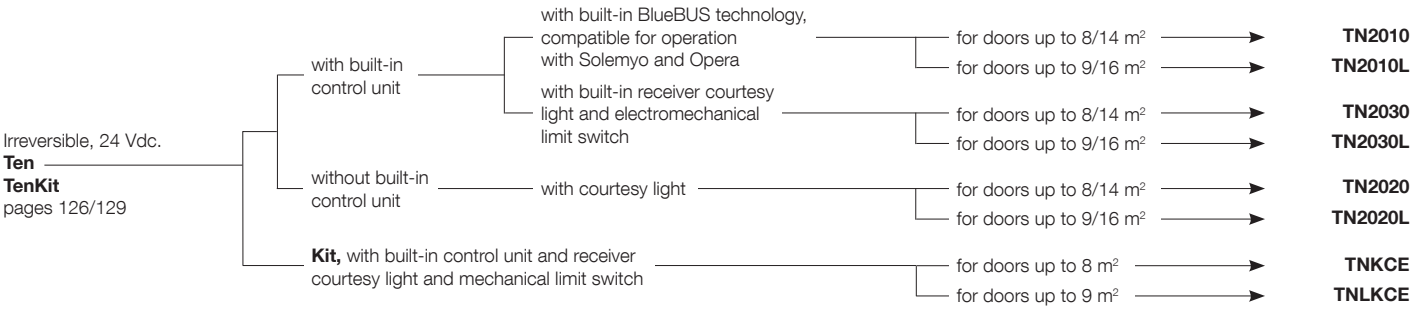

Spinbus
SpinbusKit

SpinKit

Ten
TenKit

Nice Selection guide

Follow the arrow and choose the right product

For sectional doors, ideal for industrial and commercial use

Irreversible with built-in control unit
24 Vdc motor, with absolute encoder
and incorporated BlueBUS technology.
Compatible for operation
with Solemyo and Opera.
Soon
pages 130/131

→ for doors up to 20 m² → **SO2000**

For sectional and sliding 2-leaf doors for industrial and commercial use

Irreversible, 24 Vdc motor,
with magnetic encoder,
with no need for limit switch
adjustment.
Sumo
pages 132/133

- IP44
  - low speed, up to 35 m² → **SU2000**
  - high speed, up to 25 m² → **SU2000V**
  - super high speed, up to 15 m² → **SU2000VV**
- IP54, up to 35 m² → **SU2010**

For folding 2-leaf doors

Irreversible
with telescopic arm.
Hyppo
pages 134/135

- 230 Vac with limit switch on opening and closing → **HY7100**
- 24 Vdc version with magnetic encoder.
  Compatible with control units with BlueBUS
  technology, Solemyo and Opera → **HY7124**

For balanced rolling doors

230 Vac,
with electromechanical
limit switch.
Rondo
pages 136/137

- reversible, without brake
  - with lifting force up to 130 kg → **RN2010**
  - with lifting force up to 180 kg → **RN2020**
- irreversible, with brake and release device
  - with lifting force up to 130 kg → **RN2030**
  - with lifting force up to 180 kg → **RN2040**

Soon

Sumo

Hyppo

Rondo

Nice Spinbus

Code	Description	Pack/pallet
SPIN30	Irreversible, 230 Vac, 24 Vdc motor, with incorporated control unit, 800 N. Complete with guide in three 1 m-sections	15
SPIN40	Irreversible, 230 Vac, 24 Vdc motor, with incorporated control unit, 1000 N. Complete with guide in three 1 m-sections	15

For sectional doors up to 12.5 m² and up-and-over garage doors up to 11.8 m².
230 Vac irreversible electromechanical gear motor, for residential use, with belt drive, 24 Vdc motor, with magnetic encoder.

Complete version of the guide in 3x1 m sections.

Rapid installation - anywhere!
The adjustable head, cord-type release and cable-controlled, step-by-step release can be fitted in any part of the garage in order to actuate the system without a remote control device and without the need to install wall-mounted control units!

Guaranteed savings and respect for the environment:
with the connection to the mains in standby mode the control unit with radio connected consumes just 0.8 W (SPIN30) and 1.2 W (SPIN40); when connected to a battery or to the Solemyo kit, consumption in standby mode is reduced to 0.036 W.

User-friendly thanks to the BlueBUS system:
which enables connection by means of just two wires between the control unit and pair of photocells.

Safe: obstacle detection system and automatic programming of the working times; motor absorption is monitored during movement, self-diagnosis by means of a flashing light and courtesy light. Acceleration and deceleration can be adjusted at the beginning and end of each opening and closing manoeuvre. Can be connected with last generation sensitive edges 8.2 KOhm.

Luminous: 40 W lamp E27 that can be used as garage lightening.

Technical specifications

Code	SPIN30	SPIN40
Electrical data		
Power supply (Vac 50/60 Hz)	230	
Absorption (A)	1.3	1.4
Power (W)	350	370
Performance data		
Speed (m/s)	0.20	
Force (N)	800	1000
Work cycle (cycles/day)	50	
Dimensional and general data		
Protection level (IP)	40	
Working temp. (°C Min/Max)	-20 ÷ +50	
Dimensions (mm)	311x327x105 h	
Weight (kg)	3.6	4.7

Utilisation limits

Using the maximum travel

	Non-projecting up-and-over door		Projecting up-and-over door		Sectional	
	H	L	H	L	H	L
SPIN30	**2.2 m**	**4.2 m**	**2.8 m**	**4.2 m**	**2.4 m**	**4.4 m**
SPIN40	**2.2 m**	**4.2 m**	**2.8 m**	**4.2 m**	**2.4 m**	**5.2 m**

Sectional

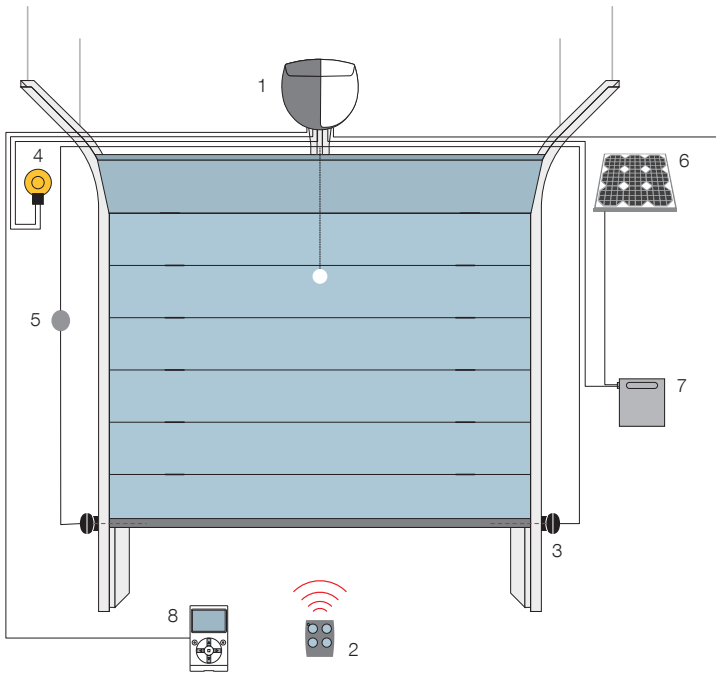

1. Spinbus **2.** Transmitter **3.** Photocells **4.** Flashing light **5.** Digital or key switches **6.** SYP* solar panel **7.** PSY24* battery box **8.** O-View* multifunction display.

*Optional connection to Solemyo and Opera systems.

Non-projecting up-and-over door

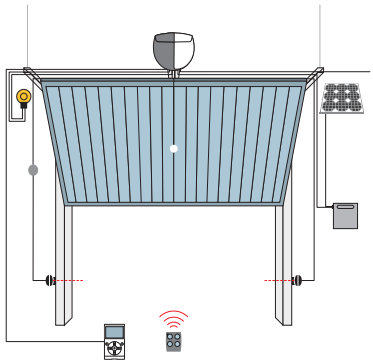

Projecting up-and-over door

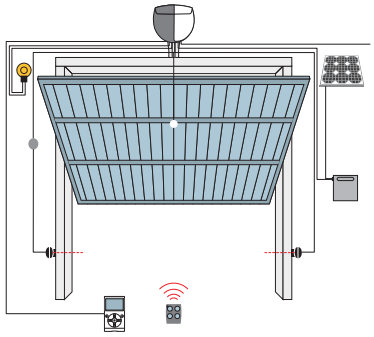

Accessories

SNA3
Spare control unit for SPIN30/SN6031.

SNA4
Spare control unit for SPIN40/SN6041.

PS124
24 V battery with integrated battery charger.

Pc/pack 1

SPA2
Kit for unlocking from the outside with cable.

Pc/pack 1

SPA5
Oscillating arm sliding on bearings with optimised structure for projecting up-and-over doors.

Pc/pack 1

SPA6
Large 585 mm long connecting arm.

Pc/pack 1

SPA7
Kit of two additional fixing brackets.

Pc/pack 2

SNA16
Quick-connect brackets for ceiling mounting.

Pc/pack 10

TMF
Pair of photocells for optical type sensitive edge.

Pc/pack 1

TS
Signboard.

Pc/pack 1

Solemyo system

The solar power kit Solemyo to automate gates, garage doors or barrier gates, including those located far from the power mains and without the need for costly and invasive excavation work.
See pages 186/187

Opera system

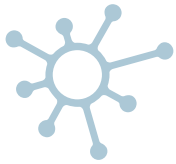

The innovative Opera system enables the installer to manage, program and control automation systems, also remotely, simply and safely, with significant savings in time.
See pages 140/141

Nice recommends customers order products in pallets in order to facilitate storage and delivery, and ensure packs are uniform. The number of packs per single pallet has been specified for this reason. Approximate draft.

Nice Spinbus

Sole myo | Opera | Blue BUS | 24V

For sectional doors up to 17.5 m² and up-and-over garage doors up to 14.7 m².
230 Vac irreversible electromechanical gear motor, for residential use, with belt drive, 24 Vdc motor, with magnetic encoder.

To use with the SNA30 - SNA31 guides.

Rapid installation - anywhere!
The adjustable head, cord-type release and cable-controlled, step-by-step release can be fitted in any part of the garage in order to actuate the system without a remote control device and without the need to install wall-mounted control units!

Guaranteed savings and respect for the environment:
when connected to the mains on standby the control unit with radio connected consumes just 0.8 W (SN6031) and 1.2 W (SN6041); when connected to a battery or to the Solemyo kit, consumption in standby mode is reduced to 0.036 W.

User-friendly thanks to the BlueBUS system:
which enables connection by means of just two wires between the control unit and pair of photocells.

Safe: obstacle detection system and automatic programming of the working times; motor absorption is monitored during movement, self-diagnosis by means of a flashing light and courtesy light. Acceleration and deceleration can be adjusted at the beginning and end of each opening and closing manoeuvre. Can be connected with last generation sensitive edges 8.2 KOhm.

Luminous: 40 W lamp E27 that can be used as garage lightening.

Code	Description	Pack/pallet
SN6031	Irreversible, 230 Vac, 24 Vdc motor, with incorporated control unit, 800 N	15
SN6041	Irreversible, 230 Vac, 24 Vdc motor, with incorporated control unit, 1000 N	15

Code	Description	Pack/pallet
SNA30	Preassembled 3 m guide	1
SNA31	1 m extension for guide SNA30	1

Technical specifications

Code	SN6031	SN6041
Electrical data		
Power supply (Vac 50/60 Hz)	230	
Absorption (A)	1.3	1.4
Power (W)	350	370
Performance data		
Speed (m/s)	0.20	
Force (N)	800	1000
Work cycle (cycles/day)	50	
Dimensional and general data		
Protection level (IP)	40	
Working temp. (°C Min/Max)	-20 ÷ +50	
Dimensions (mm)	311x327x105 h	
Weight (kg)	3.6	4.7

Utilisation limits

Using the maximum travel

	Non-projecting up-and-over door		Projecting up-and-over door		Sectional	
	H	L	H	L	H	L
SN6031 with SNA30	**2.2 m**	**4.2 m**	**2.8 m**	**4.2 m**	**2.4 m**	**5 m**
SN6041 with SNA30	**2.2 m**	**4.2 m**	**2.8 m**	**4.2 m**	**2.4 m**	**5.2 m**
SN6031 with SNA30 + SNA31	**3.2 m**	**2.9 m**	**3.5 m**	**3.4 m**	**3.4 m**	**3.5 m**
SN6041 with SNA30 + SNA31	**3.2 m**	**4.2 m**	**3.5 m**	**4.2 m**	**3.4 m**	**5.2 m**

Nice recommends customers order products in pallets in order to facilitate storage and delivery, and ensure packs are uniform. The number of packs per single pallet has been specified for this reason. Approximate draft.

Sectional

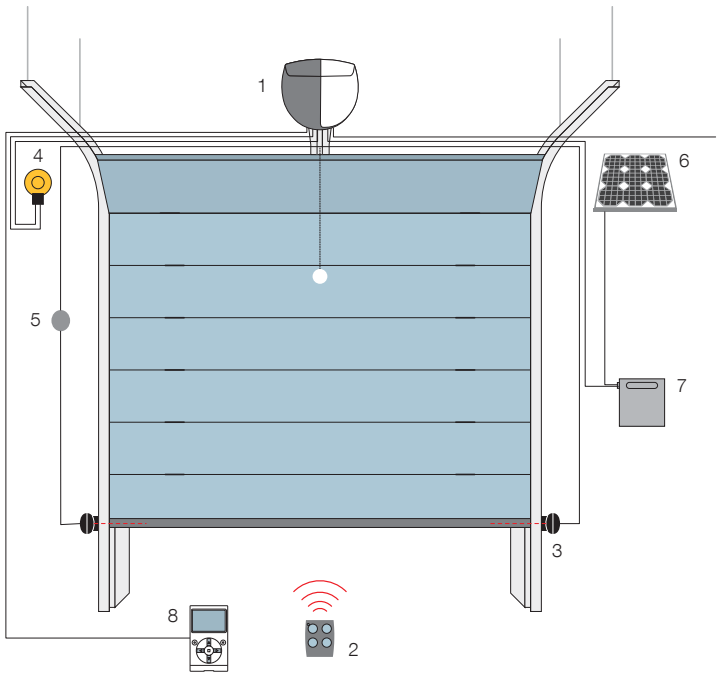

1. Spinbus **2.** Transmitter **3.** Photocells **4.** Flashing light **5.** Digital or key switches **6.** SYP* solar panel **7.** PSY24* battery box **8.** O-View* multifunction display.

*Optional connection to Solemyo and Opera systems.

Non-projecting up-and-over door

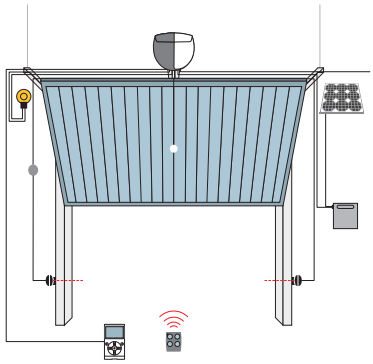

Projecting up-and-over door

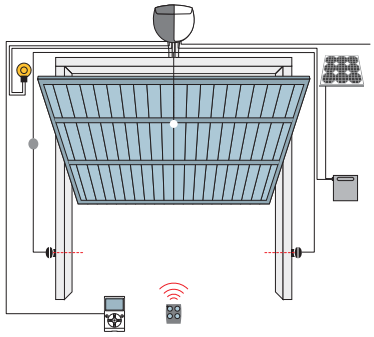

Accessories

SNA3
Spare control unit for SPIN30/SN6031.

SNA4
Spare control unit for SPIN40/SN6041.

PS124
24 V battery with integrated battery charger.

Pc/pack 1

SPA2
Kit for unlocking from the outside with cable.

Pc/pack 1

SPA5
Oscillating arm sliding on bearings with optimised structure for projecting up-and-over doors.

Pc/pack 1

SPA6
Large 585 mm long connecting arm.

Pc/pack 1

SPA7
Kit of two additional fixing brackets.

Pc/pack 2

SNA16
Quick-connect brackets for ceiling mounting.

Pc/pack 10

TMF
Pair of photocells for optical type sensitive edge.

Pc/pack 1

TS
Signboard.

Pc/pack 1

Solemyo system

The solar power kit Solemyo to automate gates, garage doors or barrier gates, including those located far from the power mains and without the need for costly and invasive excavation work.
See pages 186/187

Opera system

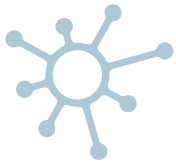

The innovative Opera system enables the installer to manage, program and control automation systems, also remotely, simply and safely, with significant savings in time.
See pages 140/141

Nice SpinbusKit 20/21/22

Blue BUS 24V

SN6021
1 gear motor with built-in control unit and SMXI plug-in receiver.

FLO2R-S
1 transmitter 433.92 MHz, 2 channels.

SPIN20KCE
Guide (thickness 35 mm) in three 1-metre sections.

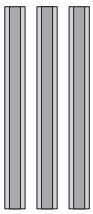

SPIN21KCE
Guide (thickness 35 mm) in one 3-metre section.

SPIN22KCE
Guide (thickness 35 mm) in one 3-metre section. + one 1-metre section.

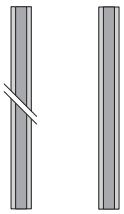

For sectional doors up to 10.5 m² and up-and-over garage doors up to 11.8 m².

Three versions in kit:
- pre-mounted, **guide in three 1-metre sections** SPIN20KCE,
- **with pre-mounted guide of 3 m** SPIN21KCE **or pre-mounted**
- **guide of 4 m (3+1 m)** SPIN22KCE.

Rapid installation - anywhere!
The adjustable head, cord-type release and cable-controlled, step-by-step release can be fitted in any part of the garage in order to actuate the system without a remote control device and without the need to install wall-mounted control units!

User-friendly thanks to the BlueBUS system: which enables connection by means of just two wires between the control unit and pair of photocells.

Safe: obstacle detection system and automatic programming of the working times; motor absorption is monitored during movement, self-diagnosis by means of a flashing light and courtesy light. Acceleration and deceleration can be adjusted at the beginning and end of each opening and closing manoeuvre. Can be connected with last generation sensitive edges 8.2 KOhm.

Luminous: 21 W lamp.

Code	Description	Pack/pallet
SPIN20KCE	Kit for automating sectional and up-and-over doors. Guide in three 1-metre sections	14
SPIN21KCE	Kit for automating sectional and up-and-over doors. Pre-mounted guide of 3 m	15
SPIN22KCE	Kit for automating sectional and up-and-over doors. Guide (thickness 35 mm) in one 3-metre section + one 1-metre section	15

N.B. The content of the package may vary: consult the retailer.

Technical specifications

Code	**SN6021**
Electrical data	
Power supply (Vac 50/60 Hz)	230
Absorption (A)	0.8
Power (W)	250
Performance data	
Speed (m/s)	0.20
Force (N)	650
Work cycle (cycles/day)	50
Dimensional and general data	
Protection level (IP)	40
Working temp. (°C Min/Max)	-20 ÷ +50
Dimensions (mm)	311x327x105 h
Weight (kg)	3.6

Utilisation limits

Using the maximum travel

	Non-projecting up-and-over door		Projecting up-and-over door		Sectional	
	H	L	H	L	H	L
SPIN20KCE	**2.2 m**	**4.2 m**	**2.8 m**	**4.2 m**	**2.4 m**	**4.4 m**
SPIN21KCE	**2.2 m**	**4.2 m**	**2.8 m**	**4.2 m**	**2.4 m**	**4.4 m**
SPIN22KCE	**3.2 m**	**2.9 m**	**3.5 m**	**3.4 m**	**3.4 m**	**3.1 m**

Sectional

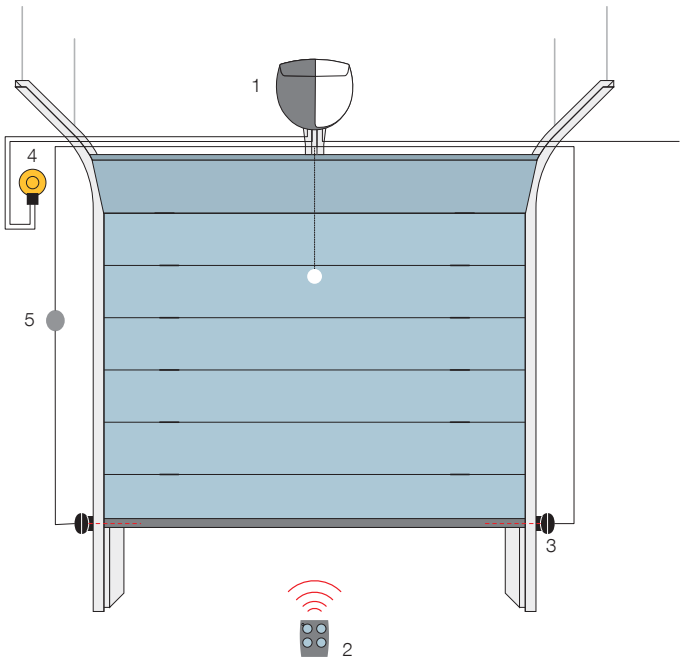

1. Spinbus **2.** Transmitter **3.** Photocells **4.** Flashing light **5.** Digital or key switches.

Non-projecting up-and-over door

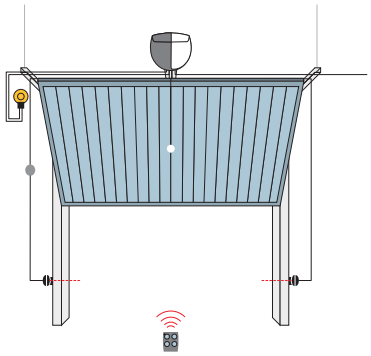

Projecting up-and-over door

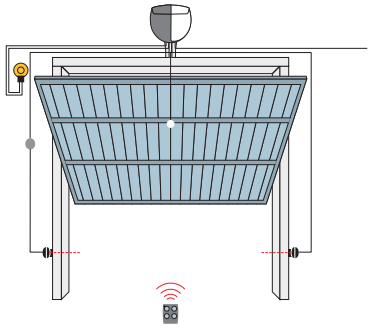

Accessories

SNA2
Spare control unit for SPIN20KCE, SPIN21KCE and SPIN22KCE.

SPA2
Kit for unlocking from the outside with cable.

Pc/pack 1

SPA5
Oscillating arm sliding on bearings with optimised structure for projecting up-and-over doors.

Pc/pack 1

SPA6
Large 585 mm long connecting arm.

Pc/pack 1

SPA7
Kit of two additional fixing brackets.

Pc/pack 2

SNA16
Quick-connect brackets for ceiling mounting.

Pc/pack 10

TS
Signboard.

Pc/pack 1

Nice recommends customers order products in pallets in order to facilitate storage and delivery, and ensure packs are uniform. The number of packs per single pallet has been specified for this reason. Approximate draft.

Nice SpinbusKit 23

Sole myo | Opera | Blue BUS | 24V

SN6021
1 gear motor with built-in control unit and SMXI plug-in receiver.

FLO2R-S
1 transmitter 433.92 MHz, 2 channels.

SNA30
Guide (thickness 35 mm) in one 3-metre section.

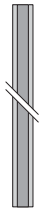

1 x 3 m

For sectional doors up to 10.5 m² and up-and-over garage doors up to 11.8 m².

With pre-mounted 3-metre guide.

Rapid installation - anywhere!
The adjustable head, cord-type release and cable-controlled, step-by-step release can be fitted in any part of the garage in order to actuate the system without a remote control device and without the need to install wall-mounted control units!

Guaranteed savings and respect for the environment:
with connection to the mains in standby mode the control unit with radio connected consumes just 5.2 W; when connected to a battery or to the Solemyo kit, consumption on standby is reduced to 0.036 W.

Safe: obstacle detection system and automatic programming of the working times; motor absorption is monitored during movement, self-diagnosis by means of a flashing light and courtesy light. Acceleration and deceleration can be adjusted at the beginning and end of each opening and closing manoeuvre. Can be connected with last generation sensitive edges 8.2 KOhm.

Luminous: 21 W lamp.

No black out: operation in the event of a power failure with optional batteries (PS124) housed inside the motor.

Code	Description	Pack/pallet
SPIN23KCE	Kit for automating sectional and up-and-over doors. Pre-mounted guide in one 3-metre section	15

N.B. The content of the package may vary: consult the retailer.

Technical specifications

Code	SN6021
Electrical data	
Power supply (Vac 50/60 Hz)	230
Absorption (A)	0.8
Power (W)	250
Performance data	
Speed (m/s)	0.20
Force (N)	650
Work cycle (cycles/day)	50
Dimensional and general data	
Protection level (IP)	40
Working temp. (°C Min/Max)	-20 ÷ +50
Dimensions (mm)	311x327x105 h
Weight (kg)	3.6

Utilisation limits

Using the maximum travel

	Non-projecting up-and-over door		Projecting up-and-over door		Sectional	
	H	L	H	L	H	L
SPIN23KCE	**2.2 m**	**4.2 m**	**2.8 m**	**4.2 m**	**2.4 m**	**4.4 m**

Sectional

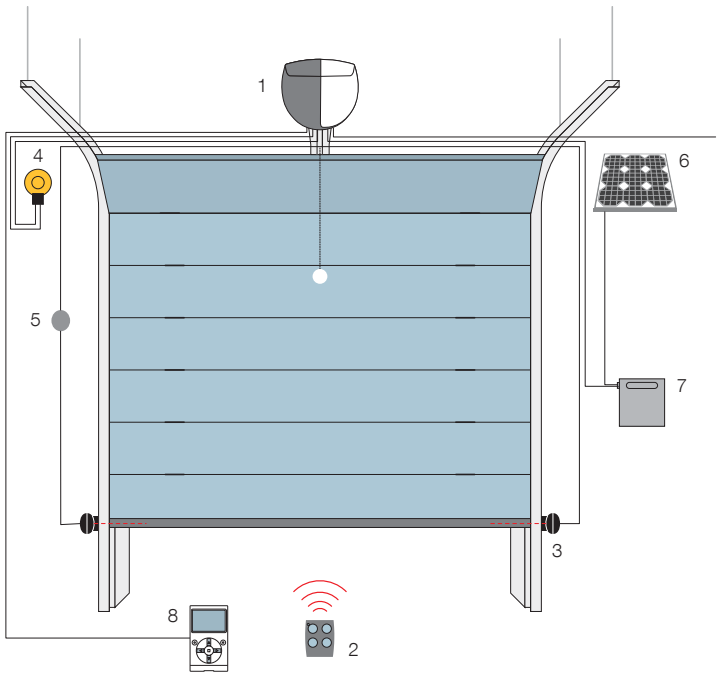

1. Spinbus **2.** Transmitter **3.** Photocells **4.** Flashing light **5.** Digital or key switches **6.** SYP* solar panel **7.** PSY24* battery box **8.** O-View* multifunction display.

*Optional connection to Solemyo and Opera systems.

Non-projecting up-and-over door

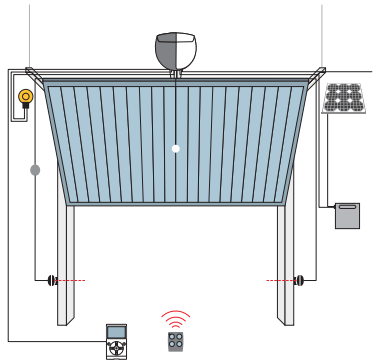

Projecting up-and-over door

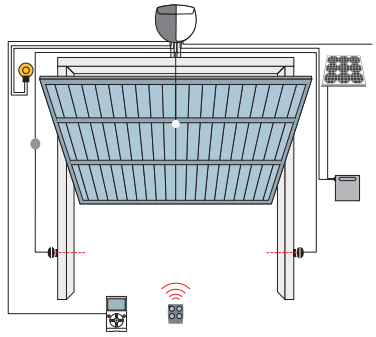

Accessories

SNA20
Spare control unit for SPIN23KCE.

PS124
24 V battery with integrated battery charger.

Pc/pack 1

SPA2
Kit for unlocking from the outside with cable.

Pc/pack 1

SPA5
Oscillating arm sliding on bearings with optimised structure for projecting up-and-over doors.

Pc/pack 1

SPA6
Large 585 mm long connecting arm.

Pc/pack 1

SPA7
Kit of two additional fixing brackets.

Pc/pack 2

SNA16
Quick-connect brackets for ceiling mounting.

Pc/pack 10

TMF
Pair of photocells for optical type sensitive edge.

Pc/pack 1

TS
Signboard.

Pc/pack 1

Solemyo system

The solar power kit Solemyo to automate gates, garage doors or barrier gates, including those located far from the power mains and without the need for costly and invasive excavation work.
See pages 186/187

Opera system

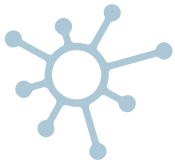

The innovative Opera system enables the installer to manage, program and control automation systems, also remotely, simply and safely, with significant savings in time.
See pages 140/141

Nice recommends customers order products in pallets in order to facilitate storage and delivery, and ensure packs are uniform. The number of packs per single pallet has been specified for this reason. Approximate draft.

Nice SpinKit

24V

SN6011
1 gear motor SN6011
with incorporated control unit
and plug-in receiver.

FLO2R-S
1 transmitter 433.92 MHz,
2 channels.

SPIN10KCE
Guide (thickness 35 mm)
in three 1-metre sections.

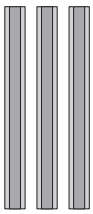

SPIN11KCE
Guide (thickness 35 mm)
in one 3-metre section.

For sectional doors up to 8.8 m² and up-and-over garage doors up to 9.8 m², belt drive.

Two versions in kit:
- pre-assembled, **3x1 m sections guide** (SPIN10KCE)
- **pre-assembled 3 m guide** (SPIN11KCE).

Advanced: incorporated radio card, compatible with the Nice Flo, FloR and Smilo systems: 150 transmitters can be entered! Input for photocells and possibility of connecting photo-test with self-learning function during installation.

Safe: obstacle detection system and automatic programming of the working times; motor absorption is monitored during movement, self-diagnosis by means of a flashing light and courtesy light. Acceleration and deceleration can be adjusted at the beginning and end of each opening and closing manoeuvre. Can be connected with last generation sensitive edges 8.2 KOhm.

Code	Description
SPIN10KCE	Kit for automating sectional and up-and-over doors. 3x1 m-sections linear guide
SPIN11KCE	Kit for automating sectional and up-and-over doors. 3 m pre-assembled guide

N.B. The content of the package may vary: consult the retailer.

Technical specifications

Code	**SN6011**
Electrical data	
Power supply (Vac 50/60 Hz)	230
Absorption (A)	0.7
Power (W)	200
Performance data	
Speed (m/s)	0.14
Force (N)	550
Work cycle (cycles/day)	30
Dimensional and general data	
Protection level (IP)	40
Working temp. (°C Min/Max)	-20 ÷ +50
Dimensions (mm)	225x330x100 h
Weight (kg)	3.3

Utilisation limits

Using the maximum travel

	Non-projecting up-and-over door		Projecting up-and-over door		Sectional	
	H	L	H	L	H	L
SPIN10KCE	**2.2 m**	**3.5 m**	**2.8 m**	**3.5 m**	**2.4 m**	**3.7 m**
SPIN11KCE	**2.2 m**	**3.5 m**	**2.8 m**	**3.5 m**	**2.4 m**	**3.7 m**

Nice recommends customers order products in pallets in order to facilitate storage and delivery, and ensure packs are uniform. The number of packs per single pallet has been specified for this reason. Approximate draft.

Sectional

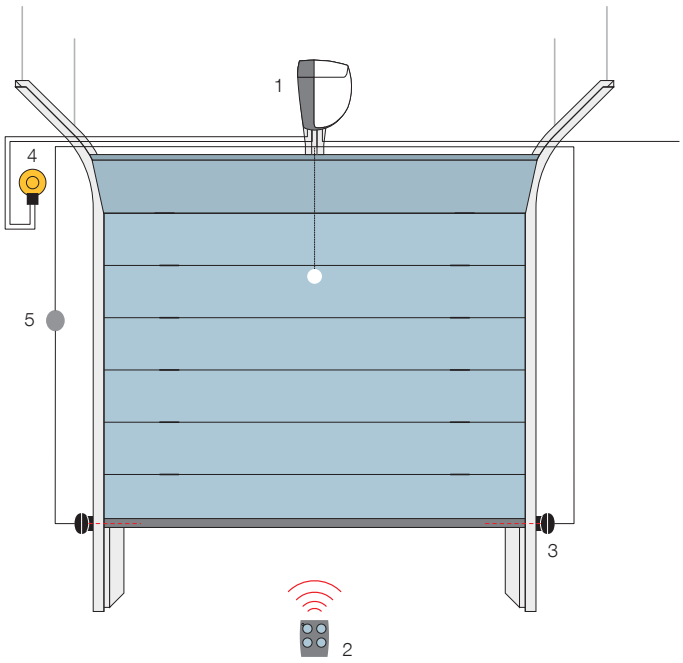

Non-projecting up-and-over door

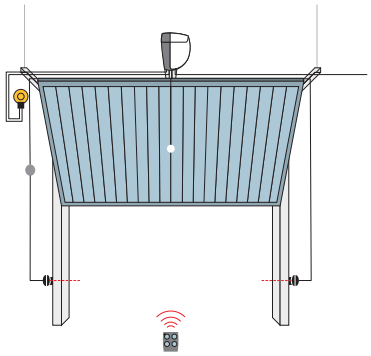

Projecting up-and-over door

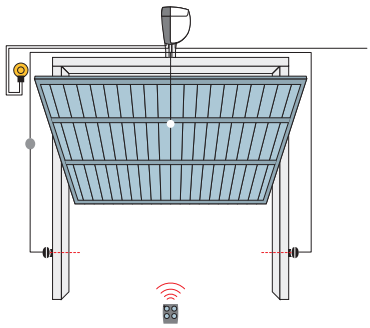

1. Spin **2.** Transmitter **3.** Photocells **4.** Flashing light **5.** Digital or key switches.

Accessories

SNA1
Spare control unit for SPIN10KCE and SPIN11KCE.

SPA2
Kit for unlocking from the outside with cable.

Pc/pack 1

SPA5
Oscillating arm sliding on bearings with optimised structure for projecting up-and-over doors.

Pc/pack 1

SPA6
Large 585 mm long connecting arm.

Pc/pack 1

SPA7
Kit of two additional fixing brackets.

Pc/pack 2

SNA16
Quick-connect brackets for ceiling mounting.

Pc/pack 10

TS
Signboard.

Pc/pack 1

Nice Ten

For projecting and non projecting up-and-over doors up to 9 m² (up to 16 m² using 2 motors), and jointed doors.
24 Vdc electromechanical gear motor.

Three versions, standard and upgraded:
- **with built-in control unit, force regulator and absolute encoder** (TN2010 and TN2010L);
- **with incorporated control unit and receiver, electromechanical limit switch** (TN2030 and TN2030L);
- **without control unit** (TN2020 and TN2020L).

Reliable and precise: memorisation of the opening and closing limit switch positions; gradual starting and slowdown during closing.

Safe: obstacle detection system and monitoring of the motor absorption during movement, self-diagnosis by means of a flashing light, courtesy light. The latest generation optical and resistive 8.2 KOhm sensitive edges can also be connected.

Functional: possibility of connecting two motors, TN2010 or TN2030 with TN2020, for doors up to 14 m²; TN2010L or TN2030L with TN2020L, for doors up to 16 m².

Code	Description	Pack/pallet
TN2010	Irreversible, 24 Vdc, with incorporated control unit, courtesy light, absolute encoder with BlueBUS technology, compatible for Opera and Solemyo systems	15
TN2010L	Irreversible, 24 Vdc, with incorporated control unit, courtesy light, absolute encoder with BlueBUS technology, compatible for Opera and Solemyo systems. Upgraded version	15
TN2030	Irreversible, 24 Vdc, with incorporated control unit and receiver, courtesy light and electromechanical limit switch	15
TN2030L	Irreversible, 24 Vdc, with incorporated control unit and receiver, courtesy light and electromechanical limit switch. Upgraded version	15
TN2020	Irreversible, 24 Vdc, with courtesy light, without incorporated control unit	15
TN2020L	Irreversible, 24 Vdc, with courtesy light, without incorporated control unit. Upgraded version	15

TN2010 and TN2010L **versions with BlueBUS technology and compatible for operation with Solemyo and Opera systems.**

Advanced: the absolute encoder technology guarantees precision without the need of a limit switch, reliability and the long term safeguard of the set values.

Simple: thanks to the BlueBUS technology which enables connection by means of just two wires between the control unit and photocells.

Energy saving: the system enters in stand-by when not in use.

Practical: the control unit and PS324 buffer battery (optional) can be connected by means of a simple connector and can be housed directly inside the motor.

Technical specifications

Code	TN2010	TN2010L	TN2010 + TN2020	TN2010L + TN2020L	TN2030	TN2030L	TN2030 + TN2020	TN2030L + TN2020L
Electrical data								
Power supply (Vac 50/60 Hz)	230							
Absorption (A)	1		1.4		1		1.4	
Power (W)	240		350		220		330	
Performance data								
Speed (Rpm)	1.7	1.4	1.7	1.4	1.7	1.4	1.7	1.4
Torque (Nm)	350	600	500	750	320	420		700
Work cycle (cycles/hour)	15		25		20		10	
Dimensional and general data								
Protection level (IP)	44							
Working temp. (°C Min/Max)	-20 ÷ +50							
Dimensions (mm)	150x158x512 h							
Weight (kg)	10		17.2*		9.5		16.7*	

* 7.2 for TN2020/TN2020L

Utilisation limits

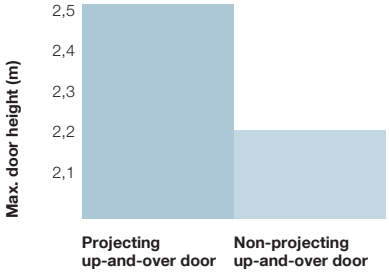

N.B. The values indicated above refer to the use of motors with standard accessories.

Non-projecting up-and-over door

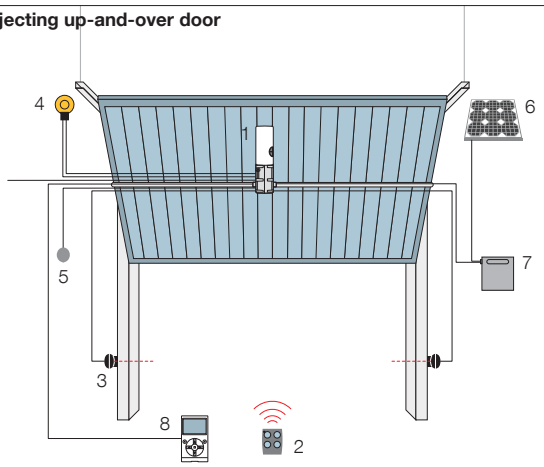

Projecting up-and-over door

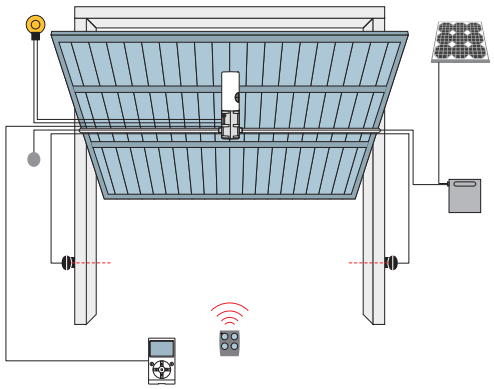

1. Ten **2.** Transmitter **3.** Photocells **4.** Flashing light **5.** Digital or key switches **6.** SYP* solar panel **7.** PSY24* battery box **8.** O-View* multifunction display.
*Optional connection to Solemyo and Opera systems.

Accessories

TNA1
Spare control unit for TN2030, TN2030L, TNKCE and TNLKCE.

TNA2
Spare control unit for TN2010 and TN2010L.

PS324
24 V battery with integrated battery charger.
Only for TN2010 and TN2010L.
Pc/pack 1

TNA9
Additional connection cable and supports for wall-mounting of PS324 battery.
Pc/pack 1

TMF
Pair of photocells for optical type sensitive edge.
Only for TN2010 and TN2010L.
Pc/pack 1

OTA2
Motor support bracket (1250 mm long).
Pc/pack 1

OTA3
Motor support bracket (2000 mm long).
Pc/pack 1

OTA9
Motor support bracket (520 mm long).
Pc/pack 1

TNA5
Pair of standard straight telescopic arms.
Pc/pack 1

TNA6
Pair of standard curved telescopic arms.
Pc/pack 1

TNA8
20x20 mm drive shaft (200 mm long).
Pc/pack 1

TNA4
20x20 mm drive shaft (1500 mm long).
Pc/pack 1

TNA38
Driving device for transmission shafts.
Pc/pack 1

OTA11
Kit for unlock from the outside with a metal cord.
Pc/pack 1

OTA12
Kit for external unlocking with key ratchet (cannot be used with laterally installed motors).
Pc/pack 1

TS
Signboard.
Pc/pack 1

Solemyo system

The solar power kit Solemyo to automate gates, garage doors or barrier gates, including those located far from the power mains and without the need for costly and invasive excavation work.
See pages 186/187

Opera system

The innovative Opera system enables the installer to manage, program and control automation systems, also remotely, simply and safely, with significant savings in time.
See pages 140/141

Nice recommends customers order products in pallets in order to facilitate storage and delivery, and ensure packs are uniform. The number of packs per single pallet has been specified for this reason. Approximate draft.

TNKCE / TNLKCE

FLO2R-S

TS

The kit contains:

TNKCE / TNLKCE 1 irreversible electromechanical gear motor, with incorporated control unit and plug-in receiver, courtesy light and electromechanical limit switch, complete with a pair of standard telescopic arms TNA5 and with relative driving devices TNA38. **FLO2R-S** 1 transmitter 433.92 MHz 2 channels. **TS** 1 signboard.

For projecting and non projecting up-and-over doors up to 9 m² and jointed doors.

Irreversible electromechanical 24 Vdc gear motor.

Two versions:
- **standard with torque at 280 Nm** (TNKCE)
- **upgraded with torque at 420 Nm** (TNLKCE).

Functions: standard input for photocells and possibility of connecting phototest function in self-learning mode during installation.

Convenient: built-in radio board compatible with the systems NiceWay, Flor, VeryVR, Flo, VeryVE and Smilo: possibility of entering up to 150 transmitters.
Push-button programming and automatic position search.

Adjustments: 3 force levels, 2 speeds, 3 pause time levels, 3 step-by-step modes.

Maximum safety: provision for connection of latest generation 8.2 KOhm sensitive edges. Obstacle detection and automatic programming of work times, monitoring of motor absorption throughout travel, self-diagnostics via the flashing light and courtesy light.
Acceleration and deceleration at the start and end of each manoeuvre.

Code	Description	Pack/pallet
TNKCE	Irreversible, 24 Vdc, with incorporated control unit and receiver, courtesy light and mechanical limit switch	15
TNLKCE	Irreversible, 24 Vdc, with incorporated control unit and receiver, courtesy light and mechanical limit switch. Upgraded version	15

N.B. The content of the package may vary: consult the retailer.

Technical specifications

Code	TNKCE	TNLKCE
Electrical data		
Power supply (Vac 50/60 Hz)	230	
Absorption (A)	0.9	
Power (W)	200	
Performance data		
Speed (Rpm)	1.7	1.4
Torque (Nm)	280	420
Work cycle (cycles/hour)	15	
Dimensional and general data		
Protection level (IP)	44	
Working temp. (°C Min/Max)	-20 ÷ +50	
Dimensions (mm)	150x158x512 h	
Weight (kg)	15.5	

Utilisation limits

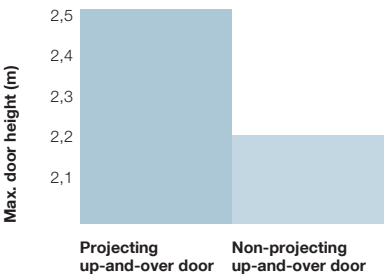

N.B. The values indicated above refer to the use of motors with standard accessories.

Nice recommends customers order products in pallets in order to facilitate storage and delivery, and ensure packs are uniform. The number of packs per single pallet has been specified for this reason. Approximate draft.

Non-projecting up-and-over door

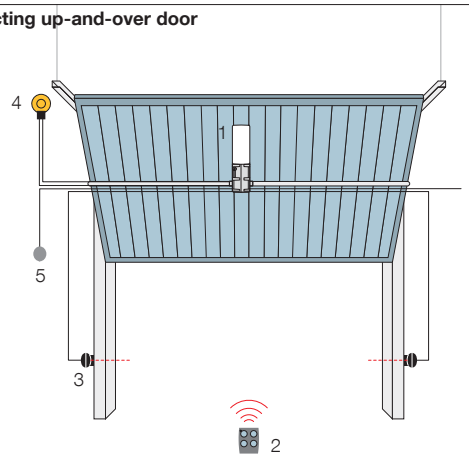

Projecting up-and-over door

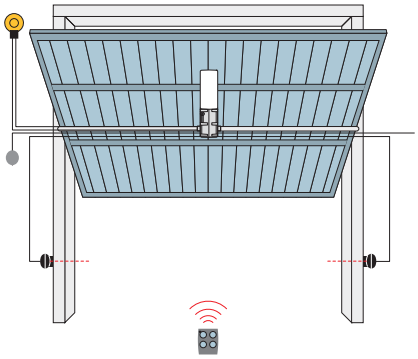

1. Ten **2.** Transmitter **3.** Photocells **4.** Flashing light **5.** Digital or key switches.

Accessories

TNA1
Spare control unit for TNKCE and TNLKCE.

OTA2
Motor support bracket (1250 mm long).

Pc/pack 1

OTA3
Motor support bracket (2000 mm long).

Pc/pack 1

OTA9
Motor support bracket (520 mm long).

Pc/pack 1

TNA5
Pair of standard straight telescopic arms.

Pc/pack 1

TNA6
Pair of standard curved telescopic arms.

Pc/pack 1

TNA8
20x20 mm drive shaft (200 mm long).

Pc/pack 1

TNA4
20x20 mm drive shaft (1500 mm long).

Pc/pack 1

TNA38
Driving device for transmission shafts.

Pc/pack 1

OTA11
Kit for unlock from the outside with a metal cord.

Pc/pack 1

OTA12
Kit for external unlocking with key ratchet (cannot be used with laterally installed motors).

Pc/pack 1

TS
Signboard.

Pc/pack 1

Nice Soon

Code	Description	Pack/pallet
SO2000	Irreversible, 24 Vdc, with absolute encoder for doors up to 5 m in height	20

For sectional doors* up to 20 m².
24 Vdc electromechanical gear motor with absolute encoder.

*For sectional doors equipped with anti-crash safeguard system (safety device useful in case of spring breaking).

Easy to install: Soon can be fitted directly onto the shaft of a sectional door; compact, particularly in width, in order to make assembly easy in any position.

User-friendly thanks to the BlueBUS system that enables users to connect the photocell couples and control unit using just two wires.

Practical: the control unit and PS124 buffer battery (optional) can be connected by means of a simple connector and can be housed directly inside the motor.

Energy saving: when the system is not being used it will switch over to standby.

Reliable and precise: memorization of limit switch positions on opening and closing; gradual starting and slowdown during closing; the abosolute encoder technology guarantees precision without the need of a limit switch, reliability and long term safeguard of the set values.

Safe: obstacle detection system; motor absorption is monitored during movement, self-diagnosis by means of a flashing light and courtesy light. Last generation of 8.2 KOhm optical and sensitive edges can also be connected.

Technical specifications

Code	**SO2000**
Electrical data	
Power supply (Vac 50/60 Hz)	230
Absorption (A)	1.6
Power (W)	350
Performance data	
Speed (Rpm)	30
Torque (Nm)	50
Work cycle (cycles/hour)	15
Dimensional and general data	
Protection level (IP)	40
Working temp. (°C Min/Max)	-20 ÷ +50
Dimensions (mm)	115x300x375 h
Weight (kg)	10.5

Nice recommends customers order products in pallets in order to facilitate storage and delivery, and ensure packs are uniform. The number of packs per single pallet has been specified for this reason. Approximate draft.

Sectional

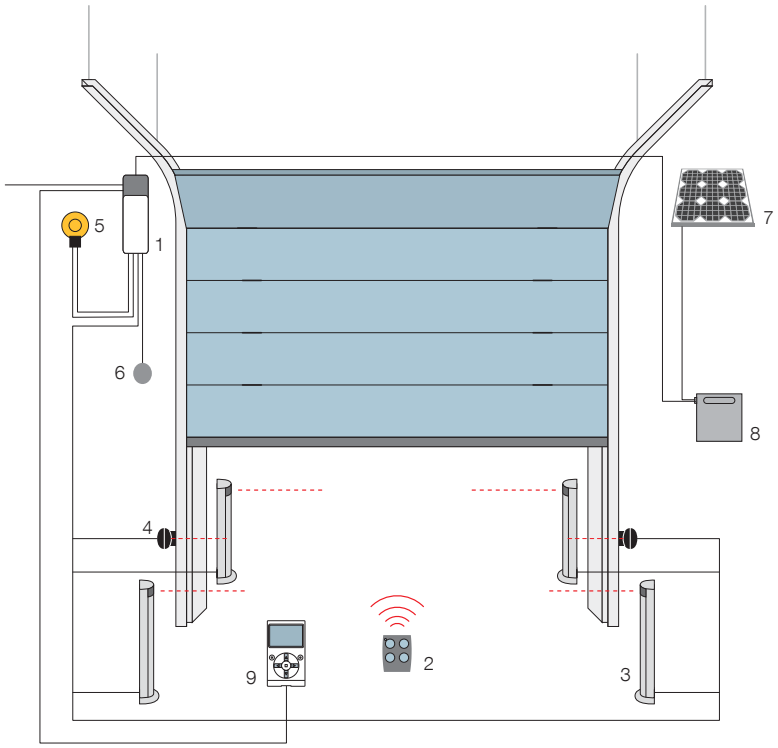

1. Soon **2.** Transmitter **3.** Photocells mounted on posts **4.** Photocells **5.** Flashing light **6.** Digital or key switches **7.** SYP* solar panel **8.** PSY24* battery box **9.** O-View* multifunction display.

*Optional connection to Solemyo and Opera systems.

Accessories

SOA2
Spare control unit for SO2000.

PS124
24 V battery with integrated battery charger.

Pc/pack 1

TMF
Pair of photocells for optical type sensitive edge.

Pc/pack 1

CRA9
Adapter for diameter 31.75 (1.1/4"), 35 and 40 mm shafts.

Pc/pack 1

TS
Signboard.

Pc/pack 1

Solemyo system

The solar power kit Solemyo to automate gates, garage doors or barrier gates, including those located far from the power mains and without the need for costly and invasive excavation work.
See pages 186/187

Opera system

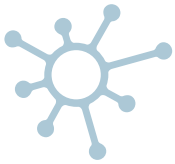

The innovative Opera system enables the installer to manage, program and control automation systems, also remotely, simply and safely, with significant savings in time.
See pages 140/141

Nice Sumo

24V

For sectional doors and two-wings sliding doors up to 35 m².
24 Vdc electromechanical gear motor with magnetic encoder, no need to adjust limit switches. Perfect for intensive use.

Revolutionary aesthetics: compact, particularly in width, in order to make assembly easy in any position; quick to install.

Easy to install: Sumo can be fitted directly onto the shaft of sectional doors. Perfect for Ø 25.4 mm shafts and can be used also with Ø 31.75-35-40 mm shafts thanks to the CRA9 adapter.

Many different functions with the separate Mindy A924 control unit:
- automatic memorization of limit switches on opening and closing;
- gradual departure and slowdown during closing;
- integrated battery charge card with optional battery power supply in the event of power failures easy programming by pressing a single button;
- pause time programming and speed adjustment;
- "service" warning light for maintenance (can be programmed according to the number of manoeuvre required).

Code	Description	Pack/pallet
SU2000	Irreversible 24 Vdc, with magnetic encoder, no need to adjust limit switches, from 15 m² up to 35 m²	20
SU2000V	Irreversible 24 Vdc, with magnetic encoder, no need to adjust limit switches, high speed, from 10 m² up to 25 m²	20
SU2000VV	Irreversible 24 Vdc, with magnetic encoder, no need to adjust limit switches, super high speed, from 10 m² up to 15 m²	20
SU2010	Irreversible 24 Vdc, with magnetic encoder, no need to adjust limit switches, IP54, from 15 m² up to 35 m²	20

Technical specifications

Code	SU2000	SU2000V	SU2000VV	SU2010
Electrical data				
Power supply (Vdc)	24			
Absorption (A)	13			
Power (W)	500			
Performance data				
Speed (Rpm)	16	23.5	42	16
Torque (Nm)	120	82	46	120
Work cycle (%)	50			
Dimensional and general data				
Protection level (IP)	44			54
Working temp. (°C Min/Max)	-20 ÷ +50			
Dimensions (mm)	110x270x350 h			
Weight (kg)	10.5			

Sectional

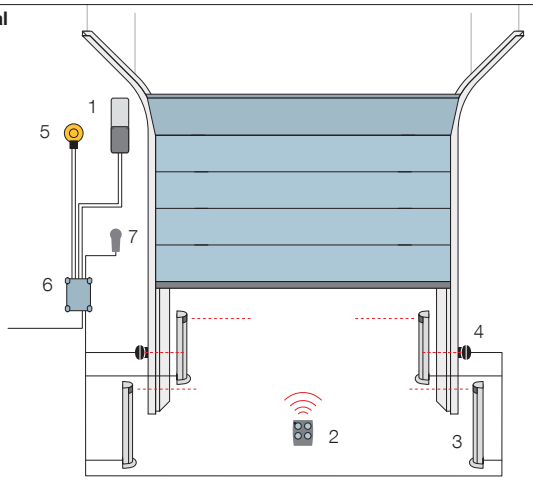

Two-wings sliding doors

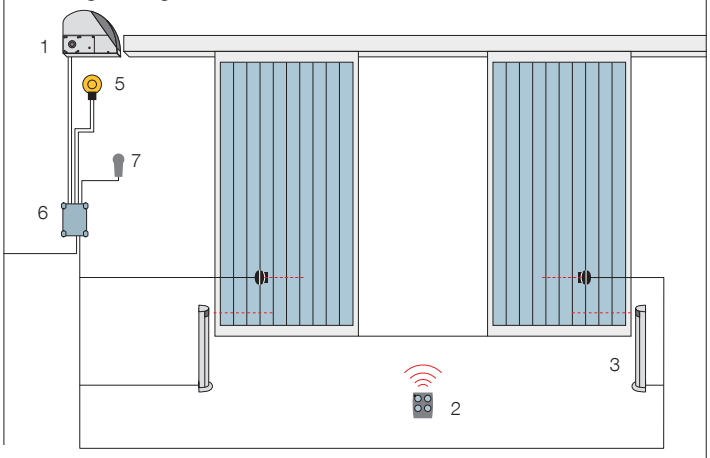

1. Sumo **2.** Transmitter **3.** Photocells mounted on posts **4.** Photocells **5.** Flashing light **6.** Control unit **7.** Digital or key switches.

Accessories

A924
Control unit.

Pc/pack 1

PUL
Central cover with buttons, complete with connecting cable and connected for A500 and A924.

Pc/pack 1

B12-B
12 V, 6 Ah batteries.

Pc/pack 1

BA3-A
Nice battery box.

KIO
Key-operated selector switch for low voltage contacts with release mechanism for metal cord.

Pc/pack 1

KA1
6 m cable release kit for KIO.
Not requested for SU2010.

Pc/pack 1

CRA1
Shaft with 18-tooth pinion Ø shaft 25.4 mm Ø inside crown 25.4 mm.

Pc/pack 1

CRA2
Joint for chain.

Pc/pack 1

CRA3
1/2” chain, 1 m pack, plus joint for chain.

Pc/pack 1

CRA4
1/2” chain, 5 m pack, ideal for single or double wing industrial doors, plus joint for chain.

Pc/pack 1

CRA5
Tensioner drive with brackets, for single or double wing industrial door.

Pc/pack 1

CRA6
36-tooth pinion Ø inside 25.4 mm.

Pc/pack 1

CRA7
18-tooth pinion Ø inside 25.4 mm.

Pc/pack 1

CRA8
Wall-fixing bracket.

Pc/pack 2

CRA9
Adapter for diameter 31.75 (1.1/4”), 35 and 40 mm shafts.

Pc/pack 1

TS
Signboard.

Pc/pack 1

Nice recommends customers order products in pallets in order to facilitate storage and delivery, and ensure packs are uniform. The number of packs per single pallet has been specified for this reason. Approximate draft.

Nice Hyppo 7100

Sole myo | Opera | Blue BUS | 24V | 230V

For 2-leaf folding doors.
Electromechanical gear motor irreversible with telescopic arm, also in 24 Vdc version, with magnetic encoder.

Single model for right and left leaves.

Pre-wired, **incorporated double limit-switch** both during opening and closing: fewer connections mean quicker installation (for HY7100 only).

Solid metal mechanics.

Sturdy, galvanised, telescopic arm.

Recommended control units:
Mindy A3, A3F, A6, A6F, A60, A700F; for HY7124 Moonclever MC824H.

24 Vdc version with magnetic encoder. Perfect for intensive use, compatible with the control unit Moonclever MC824H:

- simple programming, by means of a single key;
- self-learning of opening and closing limit positions;
- automatic fault diagnostics;
- programming of pause time;
- pedestrian pass door;
- deceleration on opening and closing;
- obstacle detection with dual technology;
- operation in event of power failure by means of optional rechargeable batteries (PS324);
- provision for connection of latest generation resistive sensitive edges.

Code	Description	Pack/pallet
HY7100	Irreversible, 230 Vac, with sturdy telescopic arm, galvanised and painted, with limit switch on opening and closing	16
HY7124	Irreversible, 24 Vdc with magnetic encoder, with telescopic arm, galvanised and painted	16

Technical specifications

Code	HY7100	HY7124
Electrical data		
Power supply (Vac 50 Hz)*	230	-
Power supply (Vdc)	-	24
Absorption (A)	1.2	5
Power (W)	250	120
Performance data		
Speed (Rpm)	1.7	2
Torque (Nm)	400	250
Work cycle (%)	30	80
Dimensional and general data		
Protection level (IP)	20	
Working temp. (°C Min/Max)	-20 ÷ +50	
Dimensions (mm)	350x165x242 h	
Weight (kg)	13	

*60 Hz version available on request.

Utilisation limits

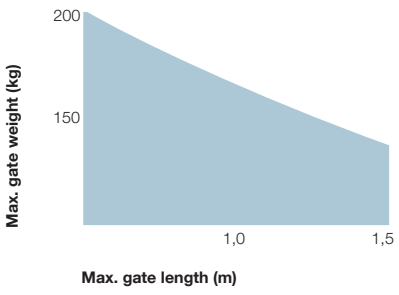

N.B. The above values are valid if the motor is used with standard accessories.

Nice recommends customers order products in pallets in order to facilitate storage and delivery, and ensure packs are uniform. The number of packs per single pallet has been specified for this reason. Approximate draft.

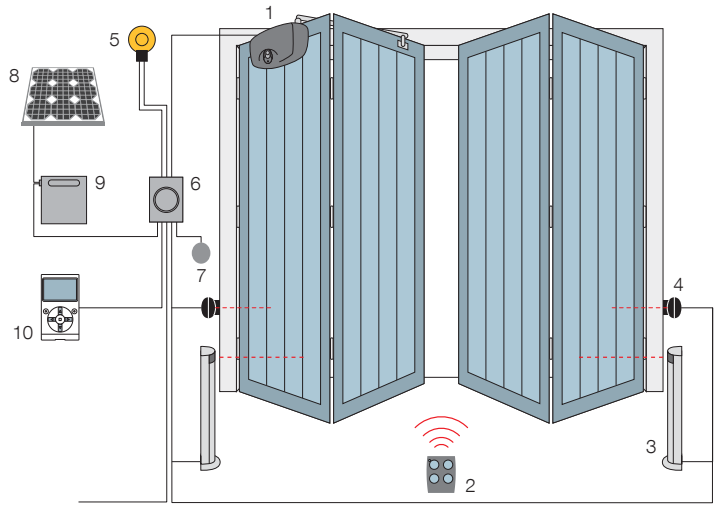

1. Hyppo **2.** Transmitter **3.** Photocells mounted on posts **4.** Photocells **5.** Flashing light
6. Control unit **7.** Digital or key switches
8. SYP* solar panel **9.** PSY24* battery box
10. O-View* multifunction display.

*Optional connection to Solemyo and Opera systems.

Accessories

HYA11
Unlock from inside with a 6 m cord.

Pc/pack 1

KIO
Key-operated selector switch for low voltage contacts, with release mechanism for metal cord.

Pc/pack 1

KA1
6 m cable release kit for KIO.

Pc/pack 1

TS
Signboard.

Pc/pack 1

Accessory

For 24 Vdc version

PS324
24 V battery with integrated battery charger.

Pc/pack 1

Solemyo system

The solar power kit Solemyo to automate gates, garage doors or barrier gates, including those located far from the power mains and without the need for costly and invasive excavation work.
See pages 186/187

Opera system

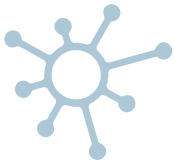

The innovative Opera system enables the installer to manage, program and control automation systems, also remotely, simply and safely, with significant savings in time.
See pages 140/141

Nice Rondo

230V

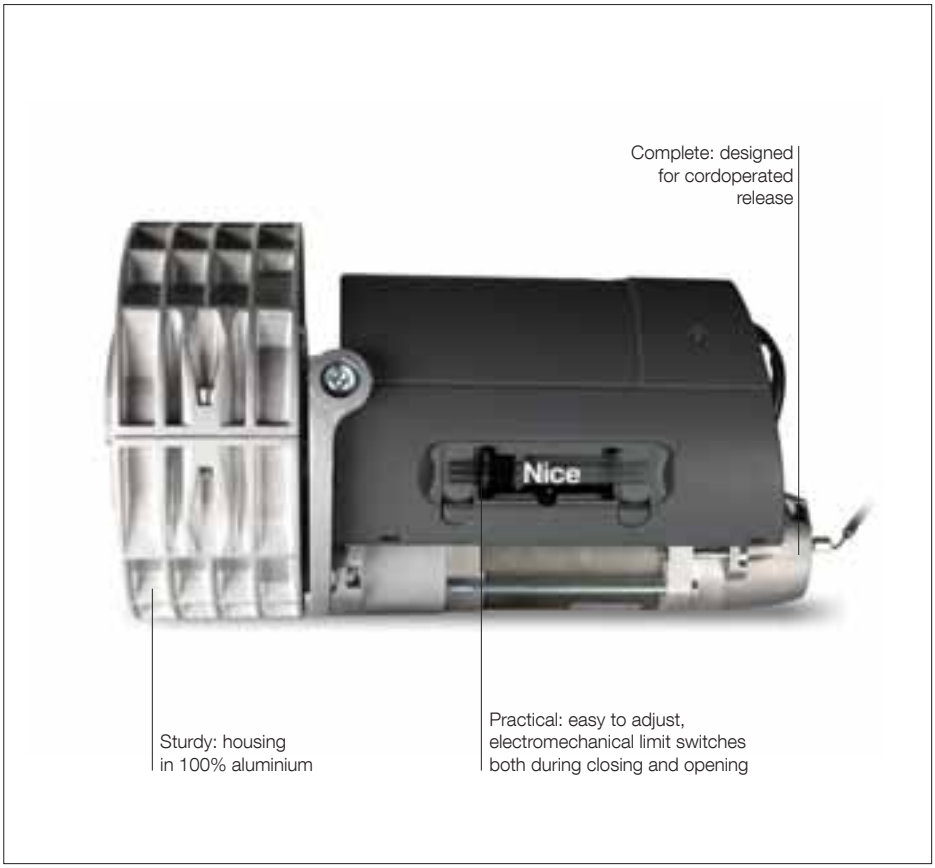

For balanced rolling doors.
Electromechanical gear motor with lifting force up to 130 kg and 180 kg.

Smart: the limit switch unit and wiring are protected by an elegant box; pre-wired capacitor.

Fast: easy and intuitive adjustment of the limit switches both during opening and closing.

Complete: supplied with 200 mm and 220 mm flange for 60 mm shafts, with 48 mm and 42 mm adaptors.

Easy to install: thanks to the guided connector, you don't need to hold the motor while you secure it using just 3 screws.

Recommended control units:
Mindy A01 and A02, - easy to use, complete and reliable, featuring:
- semi-automatic or automatic operation;
- complete reverse run with photocell;
- step-by-step operation;
- programmable Step-by-step/Open input;
- programmable Stop/Photo input;
- input for resistive edge;
- incorporated radio card, compatible with the Nice Flo, FloR and Smilo systems.

Code	Description	Pack/pallet
RN2010	Reversible, without brake, with lifting force up to 130 kg	21
RN2020	Reversible, without brake, with lifting force up to 180 kg	21
RN2030	Irreversible, with brake and release device, with lifting force up to 130 kg	21
RN2040	Irreversible, with brake and release device, with lifting force up to 180 kg	21

Technical specifications

Code	RN2010	RN2030	RN2020	RN2040
Electrical data				
Power supply (Vac 50 Hz)*	230			
Absorption (A)	2		2.6	
Power (W)	450		600	
Performance data				
Speed (Rpm)	10			
Torque (Nm)	130		180	
Work cycle max (%)	50% with 30 s ON and 30 s OFF			
Dimensional and general data				
Protection level (IP)	20			
Working temp. (°C Min/Max)	-20 ÷ +50			
Dimensions (mm)	Ø 210x338	Ø 210x355	Ø 210x338	Ø 210x385
Weight (kg)	9.5		10	

*60 Hz version available on request.

Nice recommends customers order products in pallets in order to facilitate storage and delivery, and ensure packs are uniform. The number of packs per single pallet has been specified for this reason. Approximate draft.

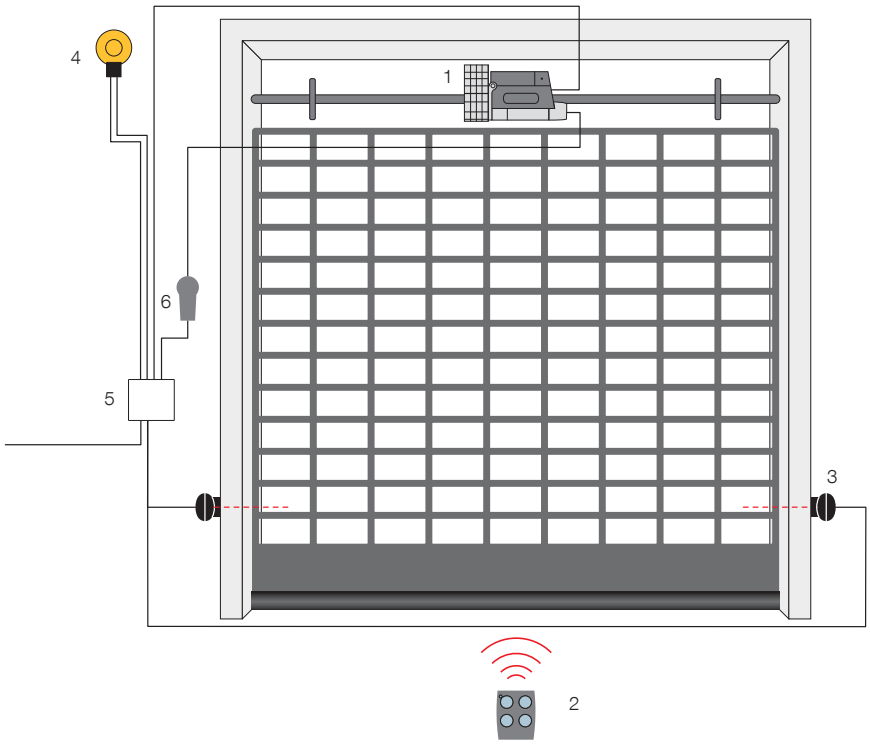

1. Rondo **2.** Transmitter **3.** Photocells **4.** Flashing light **5.** Control unit **6.** Digital or key switches.

Accessories

A01
Control unit.

Pc/pack 1

A02
Control unit
with automatic closing.

Pc/pack 1

KIO
Key-operated selector switch for low voltage contacts, with release mechanism for metal cord.

Pc/pack 1

RNA01
Electronic brake
for RN2020 and RN2010.

Pc/pack 1

TS
Signboard.

Pc/pack 1

Control systems

4|11 The Nice World

12|65 Systems for swing gates

66|85 Systems for sliding gates

86|109 Barrier gate operator systems

110|137 Systems for garage and industrial doors

138|179 Control systems

180|205 Accessories

206|225 Control units

226|229 Product code alphabetical index

The Nice electronics at a glance 140|143

Opera system 150|157 O-View O-Box, One, OX4T

Transmitters and receivers
158|159 INB Control interface
160|165 NiceWay
166|169 Sistema Tag
170|175 Flor-s, Flor-m, VeryVR, Planotime
176|177 Smilo
178|179 Flo, VeryVE

Nice Opera Control, advanced management of automation systems also at a distance.

The innovative Opera system enables the installer to manage, program and control automation systems, also remotely, simply and safely, with significant savings in time.

The **Opera** system comprises transmitters and **One** series receivers, the O-Box connection interface and the communication **software "O-View Software Suite"** and **"O-Box Software Suite"**.
All components communicate via **BUS T4** or the new **O-Code** Rolling Code system, making transmissions safer and reducing automation response times.

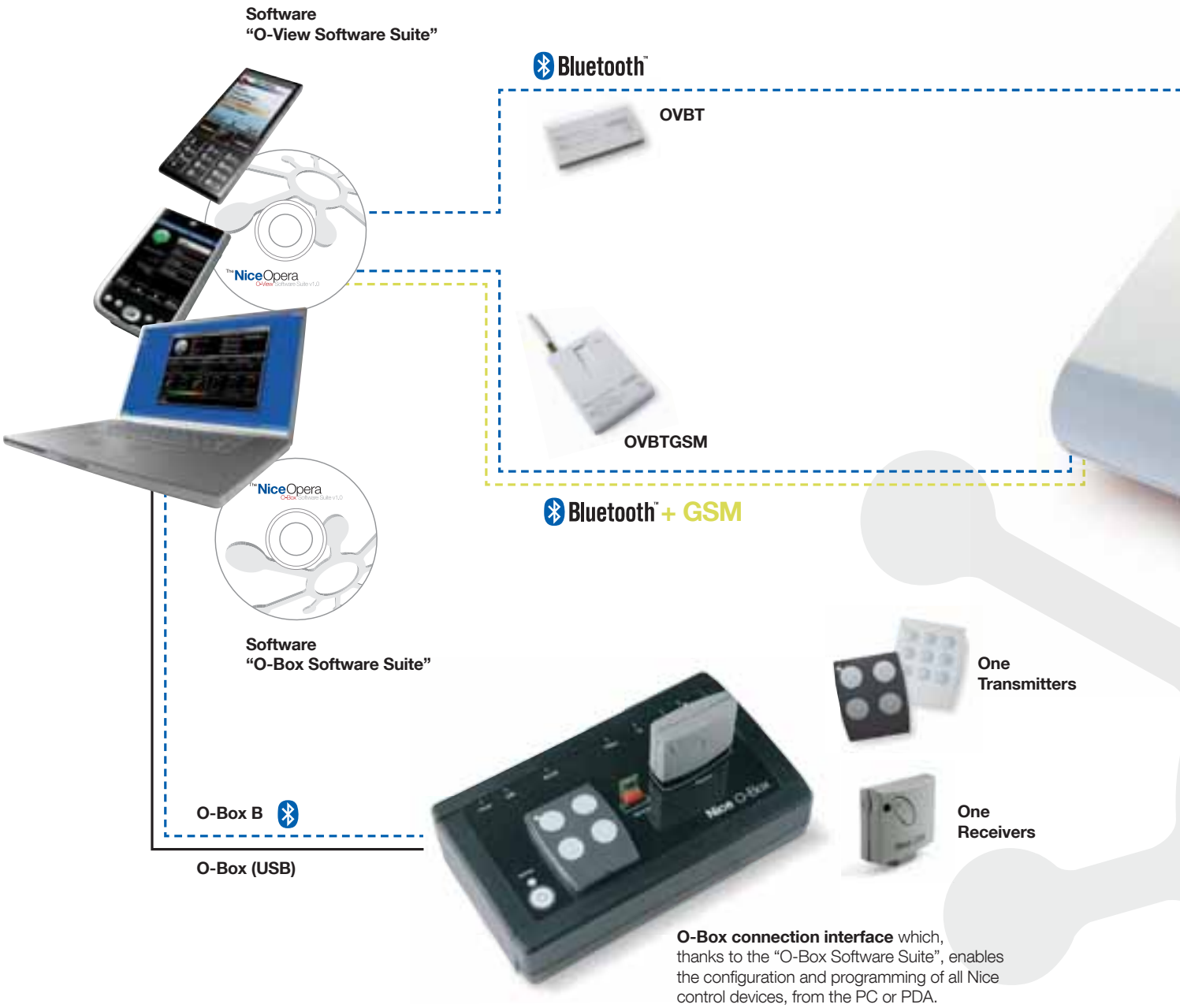

O-Box connection interface which, thanks to the "O-Box Software Suite", enables the configuration and programming of all Nice control devices, from the PC or PDA.

Nice Opera simplifies the installer's work, making for easier programming, and enabling access to all control panel parameters to adapt the system to all requirements. No specific procedures needed for each product: single programming mode with intuitive menus, with no need to consult instructions.

Constantly efficient assistance for all customers: Simplifies system programming by means of the O-View multifunction display which when connected directly to the control panels compatible with the Opera system via BUS T4, enables full access to the system functions, for practical, rapid and advanced programming.

BUS T4 is the innovative communication protocol that enables you to create extensive networks of compatible automation systems, managing them from a single point via O-View.

Device management can be protected by two password levels. By interfacing the system with the PC, you can control a complex automation system such as those found in densely frequented buildings (hospitals, hotels, companies, etc.).

<<< BUS T4

O-View, multifunction display
Unit for control, programming and diagnostics for devices equipped with BUS T4 connection, on site or remotely via GPRS thanks to the connection with your PDA, Smartphone or PC.

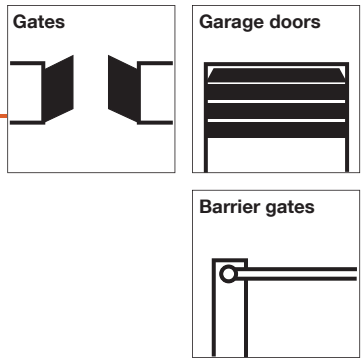

<<< BUS T4

OX4T universal 4-channel receiver
with built-in transmitter. For remote control of any automation, irrigation and lighting systems or other electrical circuits.

Nice Motors not designed for

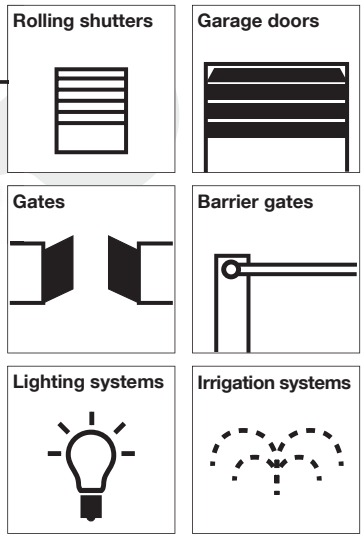

Nice Control systems

Maximum versatility and safety
in managing, from any point within
the home, the range of Nice automations,
and more….

User friendly and state-of-the-art control systems enable the activation of any system just as required: via radio, by card or by touch-control, digital combination keypads or using a simple key.

The Nice range has a wealth of solutions that use radio signals to simplify the installation, the programming and use of each automation.

1. With just a click

Small, slim and coloured, ideal to carry in your pocket, bag or use as stylish key rings, or table-top or wall-mounted, for control of the entire home at your fingertips! These are the Nice radio control systems, the choice is yours!

One

FloR

Smilo

Very

NiceWay
Modular radio control system
for made-to-measure proper solutions

Portable and table-top supports

Portable, wall mounted and table-top supports

Wall mounted supports

Mini covers

Discover how easy it is to guarantee safety with Nice products, all compliant with the most stringent of European standards: positionable synchronised photocells; obstacle detection and phototest function to prevent manoeuvres when necessary; 24 V power supply and rechargeable batteries to enable motor operation also during a power failure.

2. Combined, key or touch selectors

Practical digital or lock type selectors, or proximity systems to enter and exit in total safety.

MoonTouch and MoonKey

MyMoon

MOCARD and HSB1

3. Automatic timer

With this timer each automation system can be set as you prefer, assigning the desired time and the usage modes, to be woken up by the early morning sun, protect your geraniums from the midday sun, or to open and close them all at a particular time.

Planotime

4. Recessed Systems

Nice presents its recessed control: the ultra-compact dimensions enable all products in the miniaturised Tag control range to be installed inside standard wall-mounted plates. The height of subtlety…

Tag System

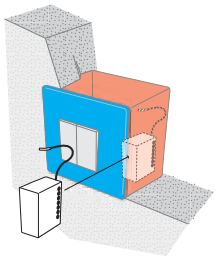

5. Safer & Safer

Nice&Safe

Makes every installation even safer, in an easy and quick way.

Moon and MoonBus

F210

FT210

Moonlight and Wallyght

Nice Selection guide: control systems

Follow the arrow and choose the right product

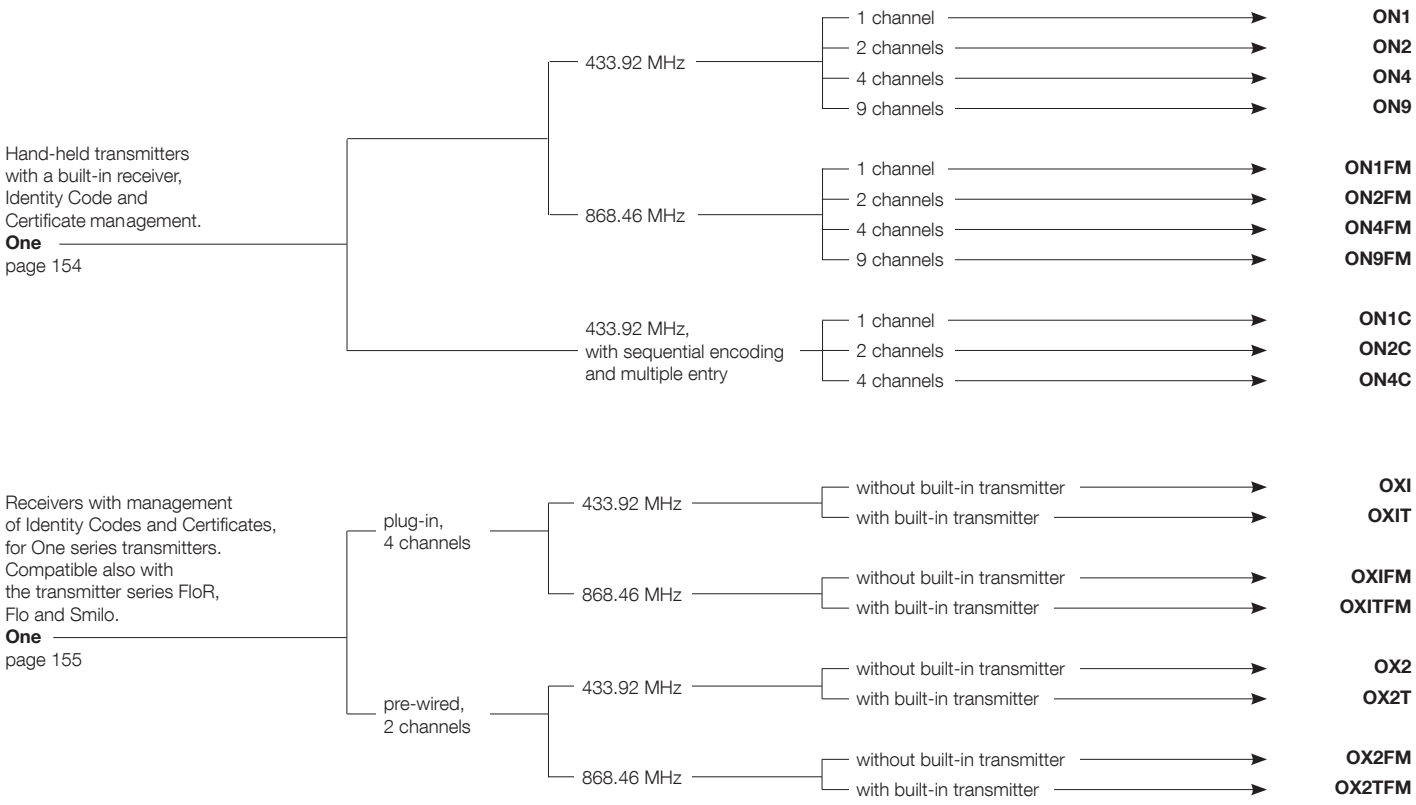

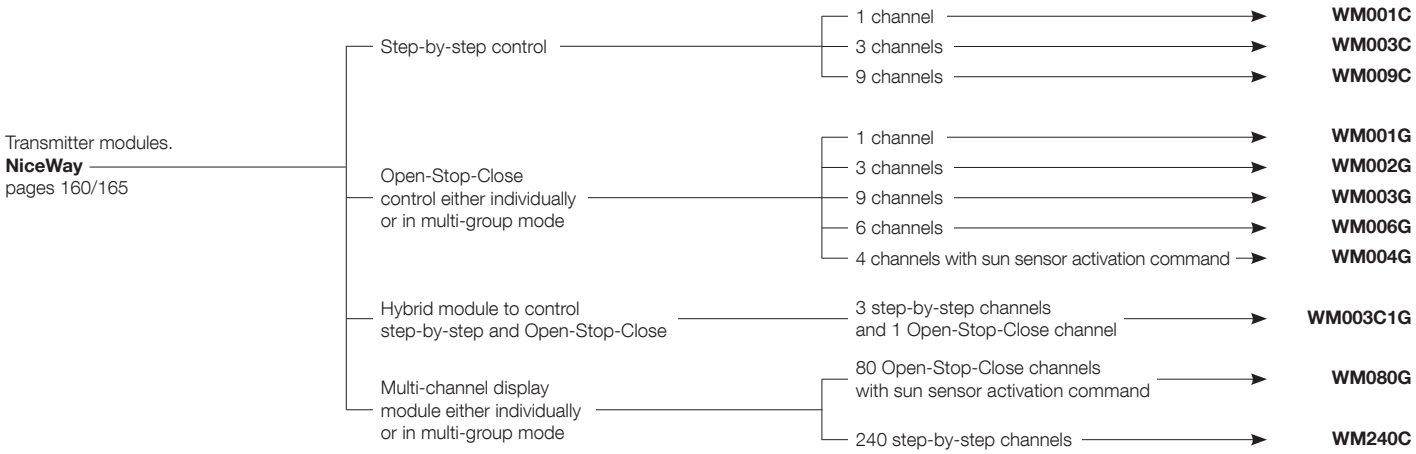

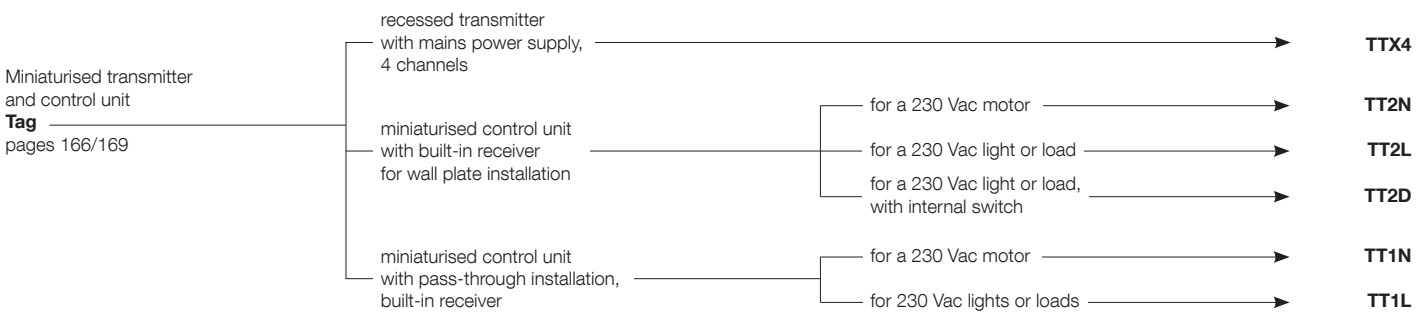

One

NiceWay

Tag

Nice Selection guide: control systems

Follow the arrow and choose the right product

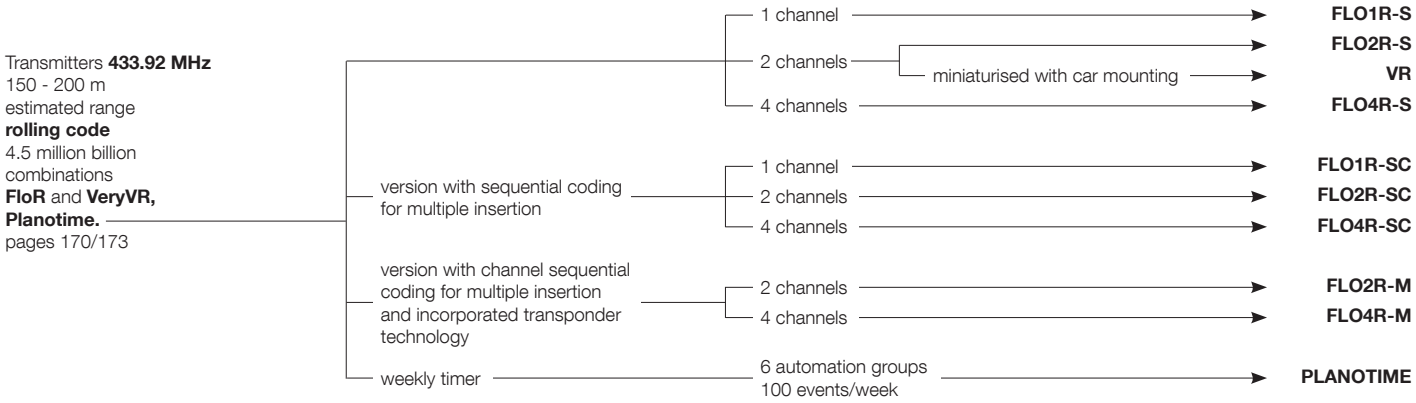

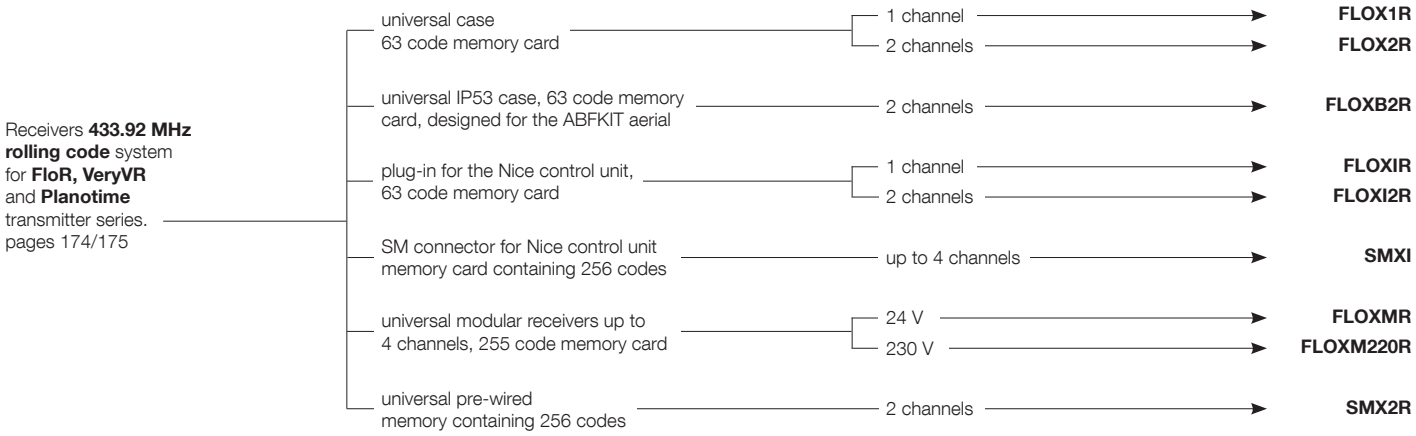

FloR

Very

Planotime

Nice Selection guide: control systems

Follow the arrow and choose the right product

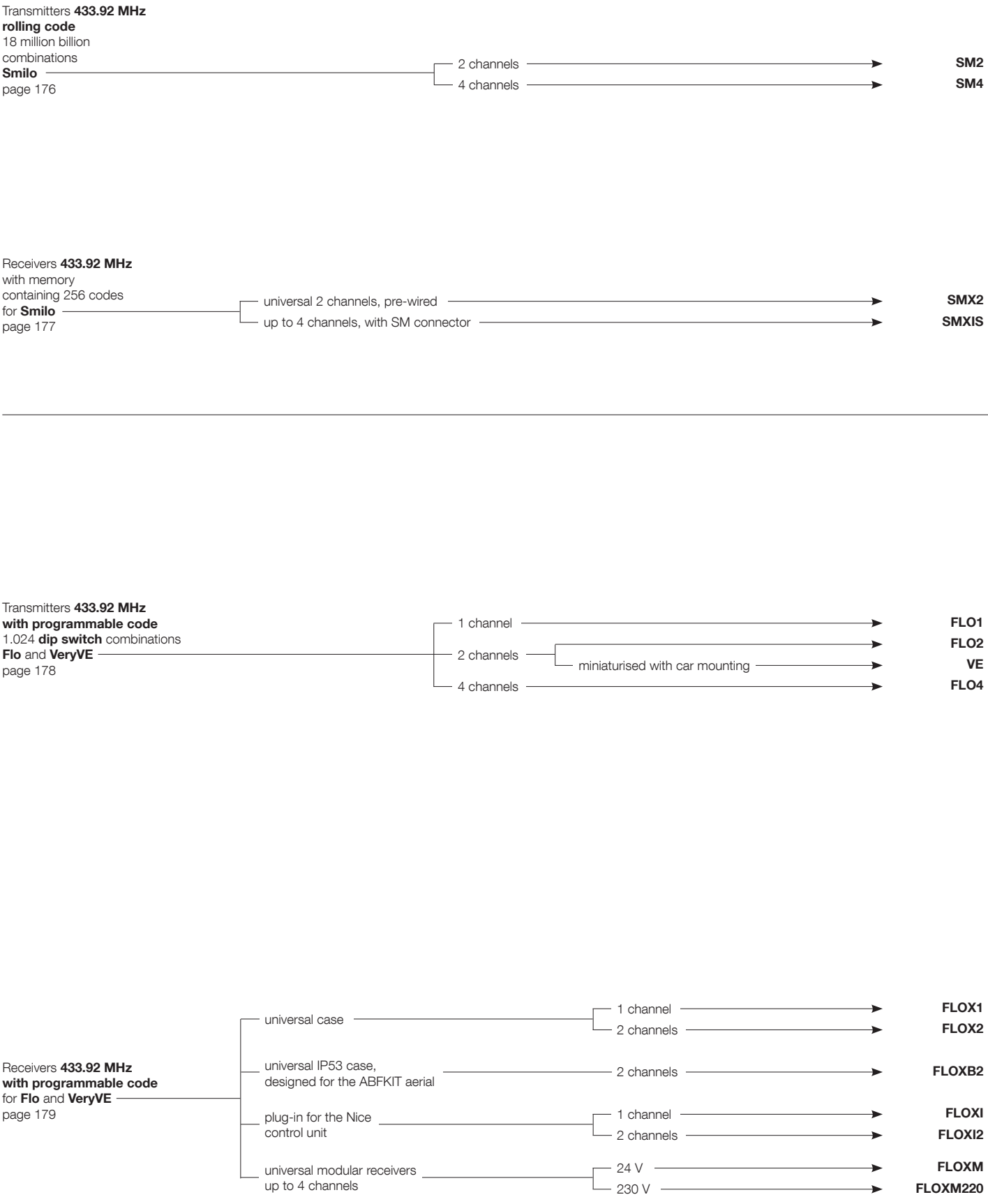

Smilo

Flo

Very

Nice O-View

Opera

OVIEW

OVBT

OVBTGSM

O-View Software Suite

Code	Description	Pc./Pack
OVIEW	Unit for control, programming and diagnostics of devices equipped with BUS T4 connection	1
OVBT	Bluetooth module for O-View and “O-View Software Suite” application for PC, PDA or Smartphone	1
OVBTGSM	GSM module for O-View and “O-View Software Suite” application for PC, PDA or Smartphone	1

Unit for control, programming and diagnostics for devices equipped with BUS T4 connection, on site or remotely via GPRS thanks to the connection with your PDA, Smartphone or PC.

Advanced mamagement of automation systems also at a distance: the multi-function display O-View is connected directly to the compatible control unit via a BUS T4 cable (supplied), enabling access to all control unit parameters to adapt the system to all needs. By connecting O-View permanently to a control unit or group of control units via BUS T4, a network can be created for local or remote centralised management.

Simple programming mode with intuitive menus valid for each product, with no need to consult the specific instructions.

O-View powers up and automatically recognises all devices on the network as soon as it is connected, displaying only the specific parameters of the device on which to intervene.

In the case of several devices on the network the BUS T4 address is identifiable by means of a text label personalised as required, enabling rapid recognition of the associated device.

Programmable: thanks to the built-in clock, it is also possible (with integrated backup battery) to program delivery of commands at a set time, for example to automate opening and closing of complex industrial and commercial systems or for the creation of “scenarios”.

A practical wall-mounted support supplied.

Safe: two password- protected levels.

Practical: O-View is your portable office, and can be connected just when programming or for maintenance, or can be installed permanently on site to exploit all the benefits of local or remote centralised management.

Technical specifications

Graphic interface	: LCD display 128 x 64 dots (46x29 mm); 2.2”
Operator input device	: joypad with 5 + 2 keys
Display/key lighting	: white light
Time and date display	: with backup battery (min. lifetime 10 years)
Maximum number of commands per hour	: 64
Event log	: storage capacity 400 events
Connection cable length (m)	: 2 (cable supplied); 700 (other cable)
Power supply	: supplied by devices on BUS T4 network
Absorbed current (mA)	: max. 20 (without accessories)
Insulation	: Class III
Housing protection rating (IP)	: 20
Working temp. (°C Min/Max)	: from -20° to +55°
Dimensions (mm)	: 107x61x20 h (with wall-mounted support: 125x70x32 h)
Weight (g)	: 75 (without cable)

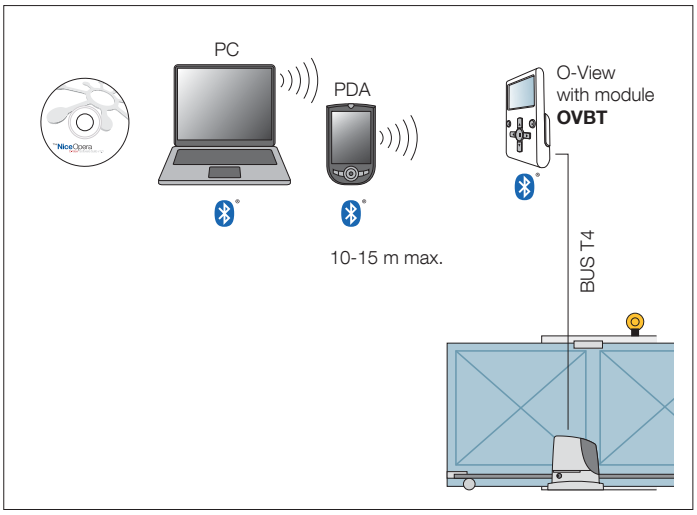

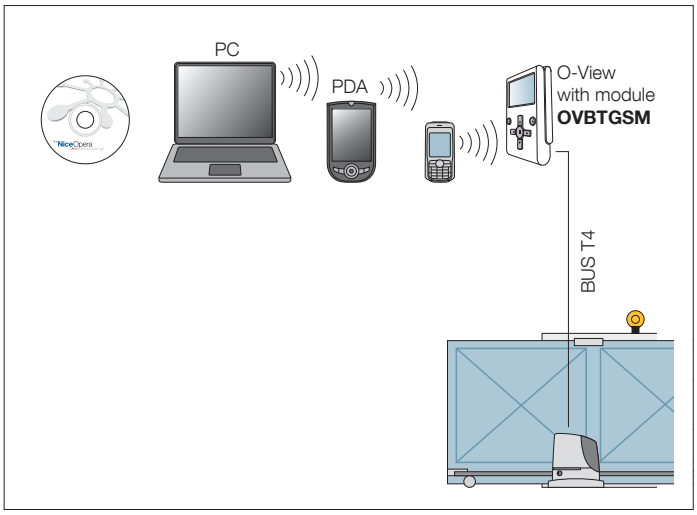

OVBT
Bluetooth connection module for O-View interface.
"O-View Software Suite" enables connection via PC or PDA to O-View in the vicinity of the system, to intervene on the control units on the BUS T4 network. Maximum connection distance 15 m.

The interface of "O-View Software Suite" has been specially designed to enable rapid access to all parameters of the connected devices without the need for physical access, as well as quick diagnostics of malfunctions by consulting the event log, all the most practical and intuitive way possible.

The O-View control function has been expanded: in just one PC screen, all applications connected via BUS T4 can be controlled.

OVBTGSM
In addition to the benefits of the OVBT module, the automation or network of automations can now be **controlled via GSM** by connecting O-View to the system via BUS T4.

A GPRS connection also enables connection via the Internet to O-View to obtain all management functions offered by the software from any location with no need for presence on site.

The user can remotely control the automation via GSM, from any of the enabled numbers, and check status, such as opening a gate by means of a phone call or by sending 4 different controls via SMS text message, with the security offered by entry of a unique password.

O-View Software Suite
This application, supplied with OVBT and OVBTGSM, as well as expanding the functions of O-View enables the creation of a database of installations with personal data of clients and configurations of each system, even on more complex versions.

There are two versions of software: "O-View Desktop" designed for installation on a PC and "O-View Mobile" which enables use of the functions of the desktop version on a smaller screen of a PDA or Smartphone.

By connecting to the site www.nice-service.com users can download the constantly updated firmware and software versions.

Minimum requirements
O-View Mobile version for PDA palmtop:
- Processor: (300 MHz) Recommended by Nice: (> 300 MHz)
- RAM: 64 MB Recommended by Nice: 128 MB
- Storage memory: 5 MB Recommended by Nice: 20 MB
- Operating system: Windows® Mobile 2003
  Recommended by Nice: Windows® 5.0 or later
- Connection: Bluetooth®
- Graphics resolution: 240 x 320, 256 colours
- PC with: CD-Rom (required for software installation on palmtop).

O-View Desktop version for PC:
- Processor: type AMD®/Intel® (500 MHz)
  Recommended by Nice: type AMD®/Intel® (1 GHz)
- RAM: 128 MB Recommended by Nice: 256 MB
- Free space on disk: 280 MB Recommended by Nice: 512 MB
- Operating system: Windows® 98 SE or later
  Recommended by Nice: Windows® 2000 or later
- Connection: Bluetooth®
- Graphics resolution: 800 x 600, 256 colours
- Disk drive: CD-Rom (required for installation).

Note – software installation includes installation of the program Microsoft®.NET Framework Redistributable 2.0.

Accessories

Code	Description	Pc./Pack
OVA1	Clamp for fitting connectors RJ14	1
OVA2	Connectors RJ14, type 6/4, for flat 4-wire cable	10
OVA3	RJ14 splitters, type 6/4, for cascade connection of devices on BUS T4 network	5
OVA4	Flat 4-wire cable for connection of devices on BUS T4 network, length 100 m	1

Nice O-Box

Code	Description	Pc./Pack
OBOX2	Connection interface complete with software “O-Box Software Suite” with USB connection cable supplied. Dual Band, for devices at 433.92/868.46 MHz	1
OBOX2B	Connection interface complete with software “O-Box Software Suite” with USB connection cable and integrated Bluetooth module. Dual Band, for devices at 433.92/868.46 MHz	1

O-Box is the revolutionary connection interface which, thanks to the dedicated software **“O-Box Software Suite”,** enables **the configuration and programming directly from the PC or PDA,** practically and intuitively, **all transmitters, receivers and other Nice control devices.**

The convenience of remote control:
O-Box enables a number of tasks to be performed directly from the office, without the need to visit the client’s system.
For example the operator can program the functions and parameters of transmitters with the utmost of ease, and send them already configured and operative to the clients.

It is also possible to:
- program transmitters in the One series via radio;
- manage all functions via radio of the receivers in the One series fitted with built-in transmitter;
- read and write transponder badges in the Moon series;
- receive data via radio from transmitters in the series Smilo, VeryVE, Flo, VeryVR, FloR, One, Niceway or via optical reader for transmitters in the Bio series;
- program receivers in the series Smilo, Bio, FloR and One and memories of the control devices MOMB, MOTB and MORX;
- create and manage an updated database with personal data of clients and configurations of the receivers installed in the respective systems.

O-Box interfaces with your PC or PDA palmtop, performing the control, entry, deletion, enabling or disabling of codes, programming of the memory, functions and typical parameters of the receivers, transmitters and other Nice control devices.

The software “O-Box Software Suite” can be installed quickly and easily either on PC (O-Box Desktop version) or on PDA palmtop (O-Box Mobile version).

Universal: O-Box manages all programming procedures possible by means of BUPC and MOU.
It also enables import of databases previously created using the software for BUPC and MOU.

Technical specifications

Code	**OBOX2**	**OBOX2B**
Frequency reception (MHz)	433.92/868.46	
Estimated range (m)	10	
Communication with Windows	USB, RS232	Bluetooth, USB, RS232
Communication with Windows Mobile	-	Bluetooth
Working temp. (°C Min/Max)	-20 : +55	
Dimensions (mm)	195x116x48	
Weight (kg)	412	418

Accessories

Code	Description	Pc./Pack
ALA1	Battery charger power supply unit	1
CABLA01	Cable for connecting O-Box to the computer via the RS232 port	1
CABLA02	Optical reader for programming transmitters in the series “Bio” and “FloR”	1
CABLA03	Cable for cloning transmitters in the series “Very”	1
CABLA04	Cable for cloning transmitters in the series “Bio” and “FloR”	1
CABLA05	Cable for programming tubular motors for awnings and shutters, equipped with port TTBUS	1
CABLA06	Cable for programming receivers universal in the series “SMX” and “OX”	1
CABLA07	Cable for cloning transmitters in the series “Ergo” and “Plano”	1

Note on CABLA accessories:
O-Box is only supplied with the USB cable; all other cables are optional and are not supplied in the pack.

Minimum software installation requirements

O-Box Mobile version for PDA palmtop:
- Processor: (300 MHz) Recommended by Nice: (> 300 MHz)
- RAM: 64 MB Recommended by Nice: 128 MB
- Storage memory: 5 MB Recommended by Nice: 20 MB
- Operating system: Windows® Mobile 2003
  Recommended by Nice: Windows® 5.0 or later
- Connection: Bluetooth®
- Graphics resolution: 240 x 320, 256 colours
- PC with: CD-Rom (required for software installation on palmtop).

O-Box Desktop version for PC:
- Processor: type AMD®/Intel® (500 MHz)
  Recommended by Nice: type AMD®/Intel® (1 GHz)
- RAM: 128 MB Recommended by Nice: 256 MB
- Free space on disk: 280 MB Recommended by Nice: 512 MB
- Operating system: Windows® 98 SE or later
  Recommended by Nice: Windows® 2000 or later
- Connection: Bluetooth®
- Graphics resolution: 800 x 600, 256 colours
- Disk drive: CD-Rom (required for installation).

Note – software installation includes installation of the program Microsoft®.NET Framework Redistributable 2.0.

Nice One

ON1 **ON1C**	**ON2** **ON2C**	**ON4** **ON4C**	**ON9**
ON1FM	**ON2FM**	**ON4FM**	**ON9FM**

Code	Description	Pc./Pack
ON1	1 channel, 433.92 MHz, colour graphite	10
ON1C	1 channel, 433.92 MHz, colour graphite, with sequential encoding and multiple entry	10
ON2	2 channels, 433.92 MHz, colour graphite	10
ON2C	2 channels, 433.92 MHz, colour graphite, with sequential encoding and multiple entry	10
ON4	4 channels, 433.92 MHz, colour graphite	10
ON4C	4 channels, 433.92 MHz, colour graphite, with sequential encoding and multiple entry	10
ON9	9 channels, 433.92 MHz, colour graphite	10
ON1FM	1 channel, 868.46 MHz, colour white	10
ON2FM	2 channels, 868.46 MHz, colour white	10
ON4FM	4 channels, 868.46 MHz, colour white	10
ON9FM	9 channels, 868.46 MHz, colour white	10

The complete range of hand-held transmitters with management of Identity Codes and Certificates, self-learning and built-in proximity receiver.

With O-Code encoding at 72 Bit, also compatible with receivers using Nice FloR encoding (only for One version at 433.92 MHz).

The **One system** comprises transmitters at 1, 2, 4 and 9 channels and receivers with connector, pre-wired, with and without built-in transmitter.

Wide selection of models at:

- **433.92 MHz, Rolling Code** using **AM amplitude modulation.** Also available in the version with sequential encoding and multiple entry (OneC).
- **868.46 MHz, Rolling Code** using **FM frequency modulation,** less sensitive to disturbance with respect to AM amplitude modulation, ensuring safer transmissions and reducing automation response times.

Safe and evolved: use of calculation and recognition system to increase security and reduce automation response times by up to three times.

With a **built-in proximity receiver,** which thanks to the exchange of the **Identity Code** between the two radio controls, enables memorisation of a new transmitter using one already enabled on the receiver.

Rapid entry, without the need for cable connections: thanks to **Certificate management and the interface O-Box,** a One transmitter can be enabled without the need to be present at the system, by simply positioning it in the vicinity of O-Box and starting up the **guided procedure from PC or PDA.**

Possibility of programming **identity codes and 9 certificates** of the receivers

The **OneC** model makes it possible to memorise entire packs in one operation, without even having to open them.

A practical and stylish transmitter, One can be used as a refined and technological key ring or be wall-mounted or fitted to the dashboard of your car, thanks to the handy support included in the pack.

Technical specifications

	Carrier frequency	Estimated range	Encoding	Power supply	Battery lifetime	Protection rating	Dimensions Weight
ON_, ON_C	433.92 MHz	200 m (outdoors); 35 m (inside buildings)*	O-Code 72 bit; rolling code	3 Vdc; lithium battery type CR2032	2 years (with 10 transmissions per day)	IP40 (use in protected environments)	44x55x10 h mm 11 g
ON_FM	868.46 MHz						

* The range of the transmitters and reception capacity of the receivers is strongly influenced by other devices operating in the area at the same frequency.

The complete range of multicode receivers with management of Identity Codes and Certificates.
With connector, pre-wired, with and without built-in transmitter.

Available in two versions:
- 433.92 MHz;
- 868.46 MHz.

Each receiver in the series One has its own secret **identification number** known as a **Certificate** to distinguish it from all others. The Certificate can also be programmed on the transmitter in the One range which uses it as an enable code to interact with the receiver.

Practical and functional:
the built-in transmitter of the receivers OXIT/OXITFM and OX2T/OX2TFM enables **bi-directional communication with the multi-functional O-Box interface;** enables operations such as download of radio codes, management of certificates and passwords directly on the receiver, also when located in positions difficult to access.

3 password-protected levels.

Internal transmitter:
the receivers OXIT/OXITFM and OX2T/OX2TFM can be used as signal repeaters to increase the operating distance between transmitters and other possible receivers in the One series. By means of O-Box, the new receivers in the One series can also be interfaced with a PC or PDA for simple and rapid programming of certificates.

3 programming modes.

Maximum flexibility: memory capacity of up to 1024 transmitters in Mode I.

Multicode:
receivers in the One series are compatible with the transmitters with encoding system O-code One at 868.46 MHz and at 433.92 MHz and Smilo, Flo, FloR, TTS (only for One at 433.92 MHz) for multi-group transmission, which enables the delivery of multiple commands simultaneously from a single transmitter.

Receivers

433.92 MHz, with connector

Code	Description	Pc./Pack
OXI	4 channels, without built-in transmitter	1
OXIT	4 channels, with built-in transmitter	1

868.46 MHz, with connector

Code	Description	Pc./Pack
OXIFM	4 channels, without built-in transmitter	1
OXITFM	4 channels, with built-in transmitter	1

433.92 MHz, pre-wired

Code	Description	Pc./Pack
OX2	2 channels, without built-in transmitter	1
OX2T	2 channels, with built-in transmitter	1

868.46 MHz, pre-wired

Code	Description	Pc./Pack
OX2FM	2 channels, without built-in transmitter	1
OX2TFM	2 channels, with built-in transmitter	1

Technical specifications

	Frequency reception	Frequency transmission	Impedance input	Sensitivity	Decoding	Number of channels	Contact relay	Power supply	Absorption	Protection rating	Dimensions weight
OXI	433.92 MHz	-	52 Ohm	>0.5 µ V for signal successful	O-Code, Smilo, FloR, Flo, TTS	4 (15 on BUS T4)	-	5 Vdc	30 mA (max)	IP 30	50x19x45 h mm, 20 g
OXIT		433.92 MHz									
OX2		-				2	max 0.5 A 50 V (NA)	from 12 to 28 Vdc/Vac	80 mA (max) with relays active		58x86x22 h mm, 55 g
OX2T		433.92 MHz									
OXIFM	868.46 MHz	-		>0.8 µ V for signal successful	O-Code	4 (15 on BUS T4)	-	5 Vdc	30 mA (max)		50x19x45 h mm, 20 g
OXITFM		868.46 MHz									
OX2FM		-				2	max 0.5 A 50 V (NA)	from 12 to 28 Vdc/Vac	100 mA (max) with relays active		58x86x22 h mm, 55 g
OX2TFM		868.46 MHz									

Nice OX4T

Code	Description	Pc./Pack
OX4T	Universal 4-channel receiver with built-in transmitter	1

Universal 4-channel receiver in the One series, with built-in transmitter.

For remote control of any automation on gates, garage doors, road barriers, shutters, awnings, venetian blinds, irrigation and lighting systems or other electrical circuits.

Equipped with BUS T4 connector for connection to O-View.

An even more extended system:
OX4T manages 4 outputs controlled by 4 relays, usable as power relays or voltage-free contacts, to extend use of the Opera system also to devices with specific provisions.

Thanks to the internal transmitter, OX4T can be used as a repeater, thereby increasing the operating range between transmitters and other receivers in the One series.

Practical and functional:
OX4T can be connected via radio to the interface O-Box and via BUS T4 to the multifunction display O-View, to enable programming, diagnostics, timed functions and management of codes, also remotely by means of the modules OVBT and OVBTGSM.

2 programming modes:
“Mode I” and the new “extended Mode II” which enables expansion of the number of controls to up to 14.

Multicode: OX4T is also compatible with the transmitters with encoding system O-code, Smilo, Flo, FloR, FloR and TTS with or without self-learning, for multicode transmission, which enables the delivery of simultaneous commands from a single transmitter.

OX4T is fitted with removable terminals to facilitate connections and a generously sized memory to enable storage of up to 1024 transmitters, with the option for password protection.

Technical specifications

Power supply (Vac 50/60 Hz)	: 110 ÷ 240
Maximum absorbed current (mA)	: 80
Encoding	: O-Code / TTS / FloR (rolling code); or Smilo (rolling code) or Flo
Frequency (MHz)	: 433.92
Antenna impedance (ohm)	: more than 0.5 for successful signal
Estimated range (m)	: 200 in open spaces 35 if inside buildings
Radiated power (dBm)	: +2
Max. capacity of transmitter memory	: 1024 (maximum)
Outputs	: 4 relays with NO and NC contacts, voltage-free
Contact capacity	: 5 A - 250 V
Timer times	: programmable from 2 seconds to 540 minutes
Protection rating (IP)	: 44 (with container intact)
Working temp. (°C Min/Max)	: from -20° to +55°
Dimensions (mm)	: 128x112x43 h
Weight (g)	: 260

Accessories

Code	Description	Pc./Pack
OVA1	Clamp for fitting connectors RJ14	1
OVA2	Connectors RJ14, type 6/4, for flat 4-wire cable	10
OVA3	RJ14 splitters, type 6/4, for cascade connection of devices on BUS T4 network	5
OVA4	Flat 4-wire cable for connection of devices on BUS T4 network, length 100 m	1

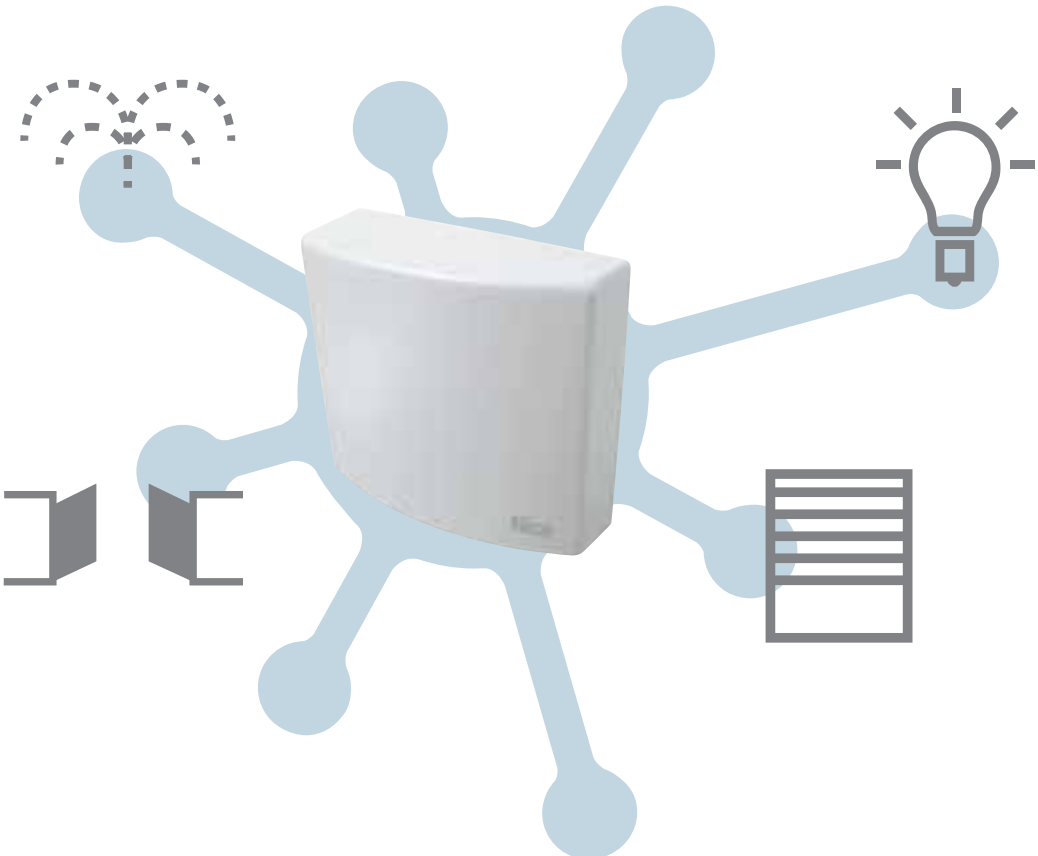

Nice and MyHome BTicino

Control interface for maximum control of the home.
A single integrated system for management of Nice automations via the control systems MyHome of BTicino.

A new intelligent and cost-saving system.

"Cartoccio" vase by Pietro Chiesa, 1932 and hanging lamp "Vertigo" by Marco Acerbis, 2005, kindly loaned by FontanaArte.

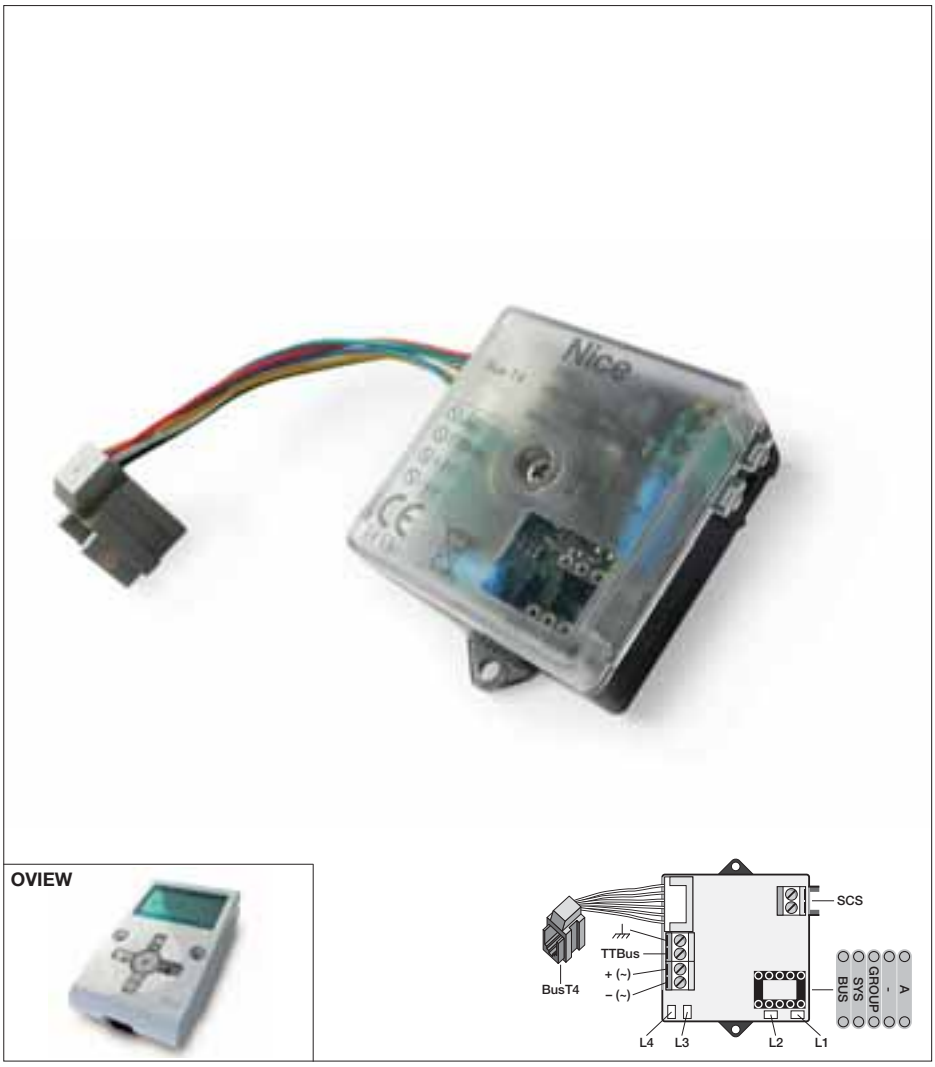

INB, the Nice control interface
that enables communication between the systems Nice Bus (TTBus and BusT4) and MyHome of BTicino (SCS).

Nice gives life to a unique home automation system, able to dialogue with all devices that control household functions, enabling, via simple pushbuttons or latest generation BTicino touch screens:

- control of up to four Nice automations for **gates** and **garage doors** with motors and/or control units fitted with BusT4 technology, or **awnings** and **shutters** with tubular motors fitted with TTBus technology;
- **control of lighting, heat control, sound diffusion, security and communication.**

The design for total integration guarantees:

- **reduced installation times and maintenance** thanks to the creation of a single Nice-BTicino system;
- **ease of installation:** INB can be installed in any junction box thanks to its compact dimensions;
- **modular system with provision for expansion** without the need for further masonry work and rationalised wiring: additional devices can easily be integrated without laying new cables and via a single supervision device;
- **maximum flexibility and safety:** within the Bus network, each device has a unique identification by the assignment of a specific value during programming, which enables each device to be distinguished from the others belonging to the same “TTBus” network or “BusT4” network connected to the same interface.
To add further devices later as required, each one can simply be assigned to a free address, connected to the Bus, and configured via Nice hand-held palm-tops. Practical connections via terminals and connectors;
- **compatible with a wide range** of Nice motors (TTBus / BusT4) equipped with Opera technology for total freedom of choice.

Code	Description	Pc/Pack
INB	Communication interface between Bticino Bus (SCS) and Nice Bus (TTBus and BusT4)	1

Code	Description	Pc/Pack
OVIEW	Unit for control, programming and diagnostics of devices equipped with BUS T4 connection	1
OVIEWTT	Unit for control, programming and diagnostics for devices equipped with TT BUS connection	1

Technical specifications

	Power supply	Consumption	Insulation	Protection rating (IP)	Working temp. (°C Min. Max)	Dimensions (mm)
INB	to BusT4, or 24 Vac/dc (limits 20 ÷ 35 Vdc, 22 ÷ 35 Vac)	approx. 18 mA	class III	20	-20÷50 °C	41x52x18h

Nice NiceWay

NRC

Modular control system
to manage the range of Nice automations, such as awnings, rolling shutters, gates and garage doors, from any point within the home.

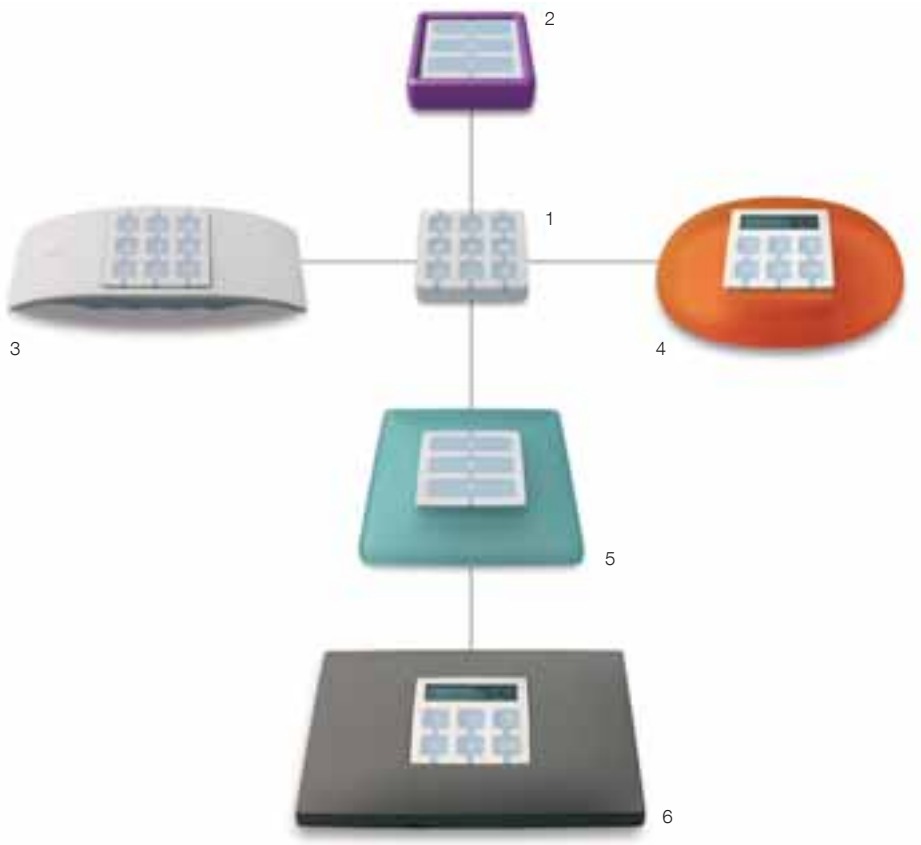

1. The transmitter module **2.** The module holder cover **3.** Wall or table shockproof holder **4.** Table shockproof holder **5.** Squared wall plate **6.** Rectangular wall plate.

Technical specifications

Power supply (Vdc)	: 3 V with 1 lithium battery CR2032
Battery life	: > 2 years with 10 events/day
Frequency	: 433.92 MHz ± 100 KHz
Radiated power	: estimated at approx. 1 mW
Protection rating (IP)	: 40
Estimated range	: 200 m in a free field, 35 m indoors
Coding	: 52 Bit rolling code
Operating temperature (°C Min. Max.)	: -20 ÷ +55
Dimensions (mm)	: 41x41x10
Weight (g)	: 14

Modular
The NiceWay system is based on a number of transmitter modules that can be placed in five different holder models to create a flexible range of made-to-measure solutions. Although the modules, available from 1 to 80 groups or 240 channels, are very small in size, they are extremely easy to operate.

Advanced and compatible
Frequency of 433.92 MHz, 52 Bit Rolling Code with (over 4.5 million of billion combinations); self-learning function.
Compatible with the 433.92 MHz Nice Ergo, Plano, FloR and VeryVR systems (Flo and Smilo with WM240C and WM080G).
Estimated range: 200 m in a free field, 35 m indoors. Extended battery life (3 V lithium battery).

All the NiceWay solutions
The 240 channel module with display, which controls 80 groups and 70 multi-groups, is ideal for the management of sophisticated systems. All the awnings, roller shutters and gates, as well as the office, home and hotel irrigation and lighting systems in just 14 g and 16 cm^2!

Made-to-measure
To protect the electronic parts from dirt and damp, the rubber function buttons are incorporated in the actual body of the control modules.
NiceWay can be used anywhere in the home, in the garage, the living room, the kitchen as well as the bathroom.

Professional
For a more professional and practical use, the system can be programmed by means of the handy Nice palmtops.

Nice Design
Sophisticated shock-proof materials, immaculate finish, and essential design: wear, comfort and ease are guaranteed by the internationally renowned and prize-winning Nice design.
The choice of discreet or personalised solutions is vast thanks to the wide choice of colours and finishes.

The heart of the NiceWay system

The 1, 3, 6 and 9-channel modules for the control of single automations, groups or multi-groups: awnings, roller shutters, rolling doors, gates, industrial and garage doors, barrier gate operators, lighting and irrigation systems.

Modules to control Step-by-Step automation systems

Module	Code	Description	Pc/Pack
	WM001C	Single channel module to control 1 automation system	10
	WM003C	Three channel module to control 3 Step-by-Step automation systems	1
	WM009C	Nine channel module to control 9 Step-by-Step automation systems	1

Memorizing radio controls in Mode I: ON - OFF Mode II: ON/OFF - HOLD TO RUN - TIMER1 - TIMER2
(for the Screen products MODO II programmation)

Hybrid module to control Step-by-Step and Open-Stop-Close automation systems

Module	Code	Description	Pc/Pack
	WM003C1G	Module to control 3 Step-by-Step and 1 Open-Stop-Close automation systems	1

Modules to control Open-Stop-Close automation systems

Module	Code	Description	Pc/Pack
	WM001G	Module to control 1 Open-Stop-Close automation system either individually or in multi-group mode	1
	WM002G	Module to control 2 Open-Stop-Close automation systems either individually or in multi-group mode	1
	WM003G	Module to control 3 Open-Stop-Close automation systems either individually or in multi-group mode	1
	WM006G	Module to control 6 Open-Stop-Close automation systems either individually or in multi-group mode	1
	WM004G	Module to control 4 Open-Stop-Close automation systems either individually or in multi-group mode and sun sensor activation command	1

Multi-channel display module

Module	Code	Description	Pc/Pack
	WM080G	Module to control 80 Open-Stop-Close automation systems either individually or in multi-group mode and sun sensor activation command	1
	WM240C	Module to control 240 Step-by-Step automation systems either individually or in multi-group mode	1

Nice Stone

WEW	WET	WEO

Code	Description	Pc/Pack
WEW	Table shockproof holder, white	10
WET	Table shockproof holder, neutral transparent	10
WEO	Table shockproof holder, orange	10

NiceWay - Stone
Portable and table-top supports.

Fetching and practical
With Stone the radio control device becomes even more functional and catching.
In shock-proof rubber to completely protect the transmitting module, fully directional for greater reception, Stone is available in neutral or bright colours so as to perfectly blend into modern or elegant homes.

Comfortable anywhere
Resistant to the most violent of shocks and garden humidity, Stone is always easy to find, be it on the living room or office coffee table, on the kitchen worktop, in the bathroom or on the side of the pool.

Nice Ondo

NiceWay - Ondo
Portable, wall mounted and table-top supports.

Portable, from table to wall
Ondo is the versatile NiceWay line support; the wall support with its simple magnetic fixing system, transforms Ondo from a comfortable portable transmitter to an inconspicuous wall plate.

Ondo, made in a shiny dirt-resistant plastic, has a rubber lower section to improve grip and prevent slipping when used on surfaces.

The transmitter module can be inserted so that Ondo can be used both in width and in length to increase the personalisation possibilities.

Code	Description	Pc/Pack
WAX	Table holder, white plastic + Ice Blue rubber	10

Code	Description	Pc/Pack
WWW	Magnetic wall support for Ondo	10

Nice Opla

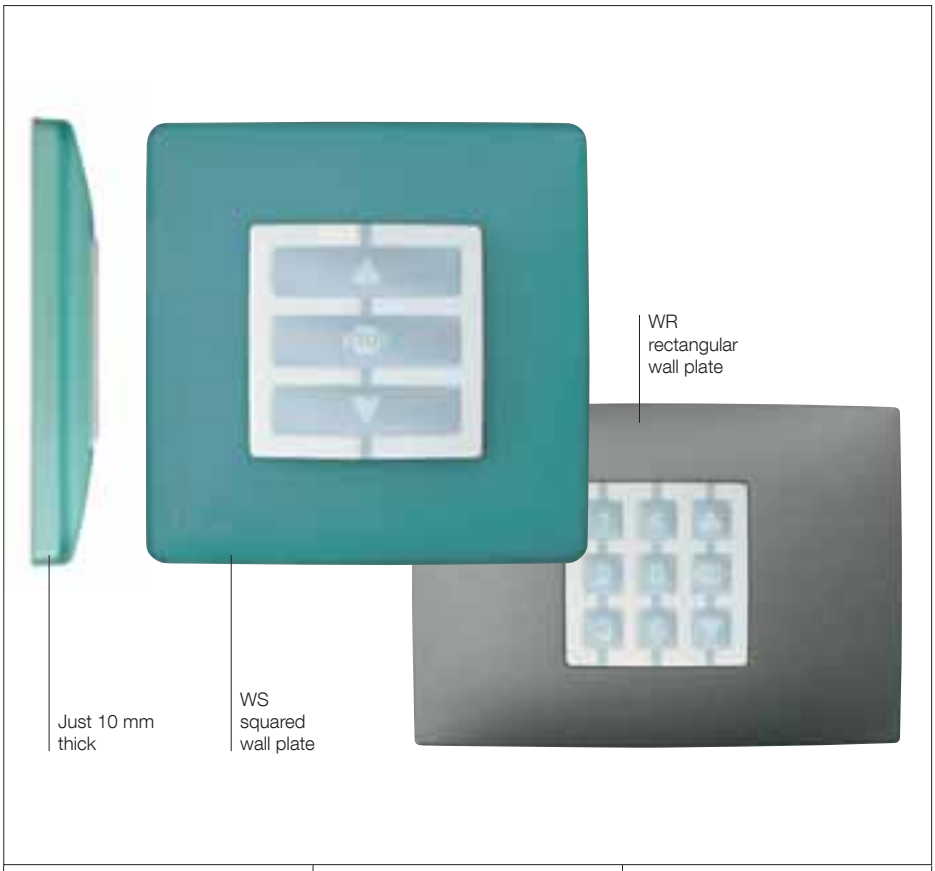

NiceWay
Wall plaques.

Inconspicuous, fetching and functional
Extremely slim - as is the plate itself - the transmitter inserted into the Opla wall plate permits to inconspicuously and fetchingly add additional control points without having to perform any building operations.

The NiceWay Opla wall plates are available in the square Opla-S version and the rectangular Opla-R version and in many different colours.

Code	Description	Pc/Pack
WSW	Squared wall plate, white	10
WSB	Squared wall plate, black	10
WSA	Squared wall plate, aluminium	10
WSG	Squared wall plate, graphite	10
WST	Squared wall plate, neutral transparent	10
WSS	Squared wall plate, seawater	10

Code	Description	Pc/Pack
WRW	Rectangular wall plate, white	10
WRB	Rectangular wall plate, black	10
WRA	Rectangular wall plate, aluminium	10
WRG	Rectangular wall plate, graphite	10
WRT	Rectangular wall plate, neutral transparent	10
WRS	Rectangular wall plate, seawater	10

WCF

WCG

WCI

WCO

NiceWay
Mini cover.

Go Nice!
Snugly in the pocket!
Every NiceWay transmitter really becomes portable with the Go support: the maximum performance to manage up to 240 channels from anywhere and with the maximum compactness.

Made of shock-proof rubber, in different and exclusive colours, Go protects the module from the most severe of knocks.

Go can be hung anywhere and can also be used as a key-ring thanks to the tie that is included in the pack.

Code	Description	Pc/Pack
WCF	Mini cover, fern green	10
WCG	Mini cover, graphite	10
WCI	Mini cover, Ice Blue	10
WCO	Mini cover, orange	10

Nice Tag system

Ideal for restorations and upgrades of existing systems.

The Tag system, disappearing inside standard wall mounted plates and suitable to confined spaces, are ideal for restorations and upgrades of existing systems to control home automations, lighting points and all loads up to 500 W not directly accessible from cable controls.

All without the need to replace the existing system or involve building work!

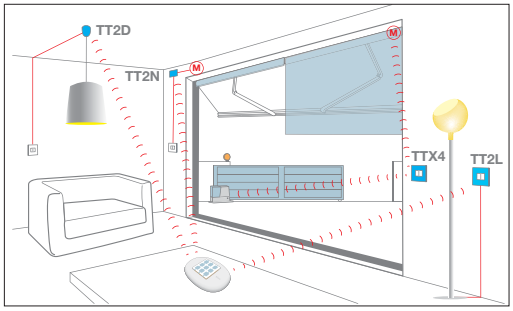

Floor lamp "Parola, Parolona" by Gae Aulenti and Piero Castiglioni, 1980, kindly loaned by FontanaArte.

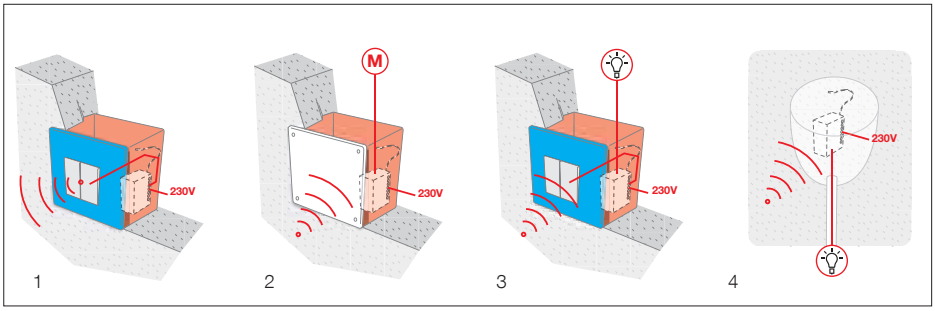

1. TTX4: recessed transmitter with mains power supply. Ideal for the control of automations not directly accessible from cable controls.
2. TT2N: miniaturised control unit for control of a 230 Vac motor up to 500 W, with built-in radio receiver.
3. TT2L: miniaturised control unit for control of lighting systems, with built-in radio receiver.
4. TT2D: miniaturised control unit for control of lighting systems from multiple points, with built-in radio receiver and switch.

TTX4, recessed transmitter with mains power supply.
Ideal for the control of automations not directly accessible from cable controls.

4-channel transmitter, compatible with the Nice transmitters in the series NiceWay, Flor-s and VeryVR.

Mains power supply and with optional connection of up to 4 pushbuttons for control via cable of automations.

Code	Description	Pc/Pack
TTX4	Recessed transmitter, 4 channels, with mains power	1

Technical specifications

Carrier frequency	: 433.92 MHz ± 100 KHz
Estimated range	: 35 m indoors
Coding	: 52 bit digital (4.5 milion billion combinations)
Power supply	: 120 or 230 Vac, 50/60 Hz; (limits 100 ÷ 255 V)
Protection rating (IP)	: 20
Working temp. (°C Min/Max)	: -20° ÷ +55°
Dimensions (mm)	: 18x33x40 h

NRC

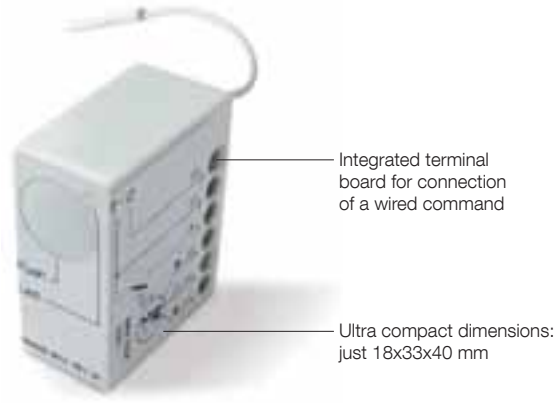

TT2N

TT2L

TT2D

Code	Description	Pc/Pack
TT2N	Control unit for 230 Vac motor with built-in radio receiver	1
TT2L	Control unit for management of 230 Vac lighting systems, with built-in radio receiver	1
TT2D	Control unit for management of 230 Vac lighting systems, with built-in radio receiver and switching module	1

Mindy TT miniaturised control units, totally compatible with the Nice transmitters in the series NiceWay, Flo, Very, Planotime, FloR and Smilo.

Maximum flexibility: can memorise up to 30 transmitters in Mode I and Mode II.

Fast programming
thanks to the programming button. An indicator Led helps the user to follow the correct programming procedure, for example signalling when the set thresholds of the climatic sensor are exceeded.

Possibility of connection
to climatic sensors Nemo and Volo S-Radio.

IP20 protection level.

TT2N, control unit for 230 Vac motor up to 500 W, with built-in radio receiver.

Possibility of connecting a pushbutton for cable control in mode STEP-BY-STEP - ALWAYS UP - ALWAYS DOWN.

Possibility of memorizing radio controls in Mode I: UP - STOP - DOWN - “HOLD-TO-RUN” DOWN
Mode II: STEP-BY-STEP - UP STOP - DOWN STOP - STOP - “HOLD-TO-RUN” DOWN - “HOLD-TO-RUN” UP.

TT2L, control unit for lighting systems, with built-in radio receiver.

For the control of 230 Vac mains voltage loads with power up to 1000 W / 500 VA.

Simplified connections thanks to the switch connected directly to the power mains (not for TT2D).

Possibility of connecting a switch for cable control in ON/OFF mode.

Possibility of memorizing radio controls in Mode I: ON - OFF
Mode II: ON/OFF - HOLD TO RUN - TIMER1 - TIMER2.

Connection to climatic sensor Volo S-Radio enables management of light activation and shutdown by means of the “Sun” sensor.

Programmable timer from a minimum of 0.5” to a maximum of approx. 9 hours; optimised programming procedure, maintaining set values also in the event of a power failure.

TT2D, control unit for lighting systems from multiple points, with built-in radio receiver and switch.

Same characteristics as TT2L.

Technical specifications

Code	TT2N	TT2D	TT2L
Power supply (Vac/Hz)	120 o 230 Vac, 50/60 Hz, limits: 100÷255 Vac		
Frequency (MHz)	433.92		
For transmitters in the series	NiceWay, Flor-s, Flo, VeryVE, VeryVR, Smilo		
Maximum motor power	500VA for Vn = 230V, 600VA for Vn = 120V	1000W/500VA for Vn = 230V, 600W/600VA for Vn = 120V	
Protection rating (IP)	20		
Manoeuvre duration (sec)	4÷240 s (factory setting approx. 150 s)	1 s÷9 h (factory setting TIMER1=1 min, TIMER2=10 min)	
Working temp. (°C Min/Max)	-20 ÷ +55		
Dimensions (mm)	40x18x32		
Weight (gr)	20		

Mindy TT1 miniaturised control units with pass-through installation, IP55 protection,

With radio-controls 433.92 MHz receiver with over 4.5 million billion combinations.
Self-recognition of the transmitters of the NiceWay, Flo, Very, Planotime, FloR and Smilo series.

TT1N for awnings and rolling-shutters.
For motors max. 500 W.

Total flexibility of motor control
with 2 transmitter memorisation modes
Mode I: UP - STOP - DOWN
Mode II: STEP-BY-STEP - ASCENT ONLY - DESCENT ONLY - STOP.

Memorizes up to 30 transmitters.

Internal terminal board for connection.

Manages the new climatic sensors Nemo and Volo S-Radio for synchronised controls.

The work time can be programmed from a minimum of 4" to a maximum of 4'.

TT1L for lighting systems, irrigation pumps, etc...
For controlling loads with a mains voltage of 230 Vac and power max 500 W.

Memorizes up to 30 transmitters.

Internal terminal board for connection.

Manages up to 2 timers for automatic switch off.

Maximum control versatility
with 2 transmitter memorisation modes
Mode I: ON - OFF with separate buttons
Mode II: ON - OFF - MAN PRESENT - TIMER.

Timer can be programmed from a minimum of 0.5" to a maximum of approximately 9'.

Code	Description	Pc/Pack
TT1N	Control unit for pass through installations for one 230 Vac motor up to 500 W, with built-in radio-controlled receiver. 2 programming modes and programmable working time	1
TT1L	Control unit for pass through installations for lighting/irrigation systems, 230 Vac max. 500 W, with built-in radio receiver. 2 programming modes and 2 timers for automatic switch off	1

Technical specifications

Code	**TT1N**	**TT1L**
Power supply (Vac/Hz)	230/50	
Frequency (MHz)	433.92	
For transmitters in the series	NiceWay, Flor-s, Flo, VeryVE, VeryVR, Smilo	
Maximum motor power	500 W / 400 VA	
Protection rating (IP)	55	
Manoeuvre duration (sec)	prog. 4-250	TIMER1 TIMER2 from 0.5" a 540'
Working temp. (°C Min/Max)	-20 ÷ +55	
Dimensions (mm)	98x26x20	
Weight (gr)	45	

Nice Flor-s

NRC

FLO1R-S
FLO1R-SC

FLO2R-S
FLO2R-SC

FLO4R-S
FLO4R-SC

Radio-controls with 4.5 million billion combinations.

433.92 MHz rolling code system with self-learning function and sequential code for multiple insertion (Flor-sc).

Ideal solution for the management of multi-use systems with a unique and personal code: the self-learning receivers are able to receive and store up to 1020 codes.

Using the BUPC palm-top device, the **Flor-sc model** makes it possible to memorise entire packs in one operation, without even having to open them.

Rolling code transmission: **absolutely secure** because it's impossible to clone the transmitter.

Self-learning function: the codes can be entered at a distance with an authorised transmitter or with a programming button on the receiver while a Led displays the different functions.

A drop in consumption but greater independence. Low battery warning via Leds.

The Flor-s system includes:

Transmitters with 1, 2, 4 channels.

Universal **receivers** with 1 or 2 channels, universal modular, plug-in or for universal outdoors IP53, with step-by-step, timer and anti-burglar functions.

The **aerial** can be incorporated in the Lucy flashing light or in the outdoor IP53 receiver, or fixed with a bracket.

Code	Description	Pc/Pack
FLO1R-S	1 channel	10
FLO2R-S	2 channels	10
FLO4R-S	4 channels	10
FLO1R-SC	1 channel with sequential code for multiple insertion	10
FLO2R-SC	2 channels with sequential code for multiple insertion	10
FLO4R-SC	4 channels with sequential code for multiple insertion	10

Technical specifications

Carrier frequency	: 433.92 MHz ±100 KHz
Estimated range	: 150 - 200 m with a tuned aerial in a free area
Coding	: digital 52 bit (4.5 million billion combinations)
Power supply	: 12 Vdc + 20% - 40% with 23 A battery
Average absorption (mA)	: 25
Dimensions (mm)	: 72x40x15 h

Nice Flor-m

NRC

Bimodal radio control unit with incorporated transponder, 4.5 million billion combinations.
433.92 MHz rolling-code system with recognition and sequential code for multiple insertion.

The Flor-m transmitters transponders offer new options for controlling entries, by uniting several commands in a single product. Available in the 2 and 4 channel versions, the features of these models are identical to those of the Flor-sc transmitters and **programmable and reprogrammable Mocardp: a Nice exclusive.**

The BUPC software makes it possible to memorise entire 100 piece packs in one operation, without even having to open them!
Flor-m can be connected to MOU palm-top for an easy management of the on-site codes or via PC;
Flor-m is recognised by both FloR receivers and MyMoon transponder readers.

Code	Description	Pc/Pack
FLO2R-M	2 channels sequential code for multiple insertion and incorporated transponder technology	10
FLO4R-M	4 channels sequential code for multiple insertion and incorporated transponder technology	10

Technical specifications

Carrier frequency	: 433.92 MHz ±100 KHz
Estimated range	: 150 - 200 m with a tuned aerial in a free area
Anti-crushing distance (cm)	: 3 ÷ 5
Coding	: 52 bit digital (4.5 milion billion combinations)
Power supply	: 12 Vdc + 20% - 40% with 23 A battery
Average absorption (mA)	: 25
Dimensions (mm)	: 72x40x15 h

Nice VeryVR

NRC

Miniaturised radio control
4.5 million billion combinations,
433.92 MHz rolling code system
with self-learning function.

A single key for controlling the automation.

Easy replacement of lithium batteries.

Advanced and refined design,
created to be the ideal transmitter
for your car or handbag (a handy support
for fixing Very inside your car is also supplied).

Small and slender: can be kept in your handbag or used as an elegant key ring.

Lithium battery: 3 year battery life.

The system can be interfaced with the BUPC palm-top device
for an easy management of the on-site codes or via PC.

Code	Description	Pc/Pack
VR	2 channels	10

Technical specifications

Carrier frequency	: 433.92 MHz ±100 KHz
Estimated range	: 150 - 200 m with tuned aerial in free space
Coding	: 52 digital bits (4.5 million billion combinations)
Power supply	: 6 Vdc with 2 lithium battery CR2016
Average absorption (mA)	: 10
Dimensions (mm)	: 65x30x10 h

Nice Planotime

NRC

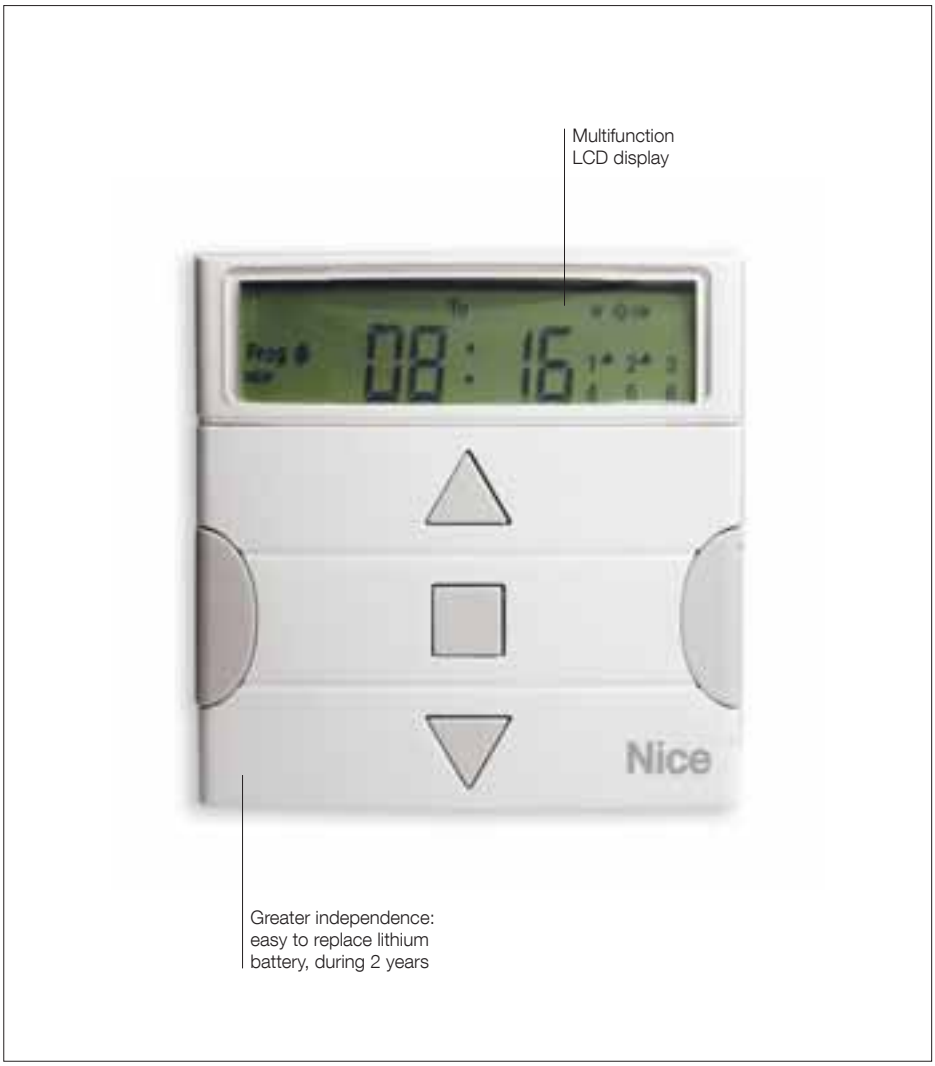

Radio-controlled week programmable timer to manage up to 6 automation units for 100 events / week.

Ultra-thin and easy to install,
thanks to the fully recessed wall support. Ergonomic design user-friendly feature large energy-saving LCD display showing date, time, groups, movement, status and functions.

Frequencies 433.92 MHz, 52 bit Rolling Code generates over 4.5 million of billion combinations; self-learning function.
Designed to dialogue with the **FloR** systems, it enables users to manage other kinds of automatisms (on condition that they are controlled by receivers from the FloR series) such as gates, garages and so on.
Estimated range: 200 m outdoors, 25 m indoors.

Exclusive functions:
- **"random"**, enables the user to set casual opening and closing times within a preset period of time, in order to pretend someone is at home when s/he is actually away on holiday;
- **"nicetime"** enables the user to interrupt the automatic cycle to clean the window;
- **sun On/Off** this enables to activate or deactivate the sun and rain sensor linked if installed;
- **easy program:** it makes programming the opening and closing manoeuvres child's play.
  Once automatic operation has been set, Planotime will record all the manoeuvres made during the week, and repeat them during the following weeks.

Code	Description	Pc/Pack
PLANOTIME	Wall-mounted radio-control timer with LCD graphic display. Can manage up to 6 automation units and 100 events / week. Designed to dialogue with the FloR series receivers	1

Technical specifications

Power supply (battery life)	: 3 V with 1 lithium battery CR2450 (2 years with 10 events/day)
Frequency	: 433.92 MHz ± 100 KHz
Radiated power	: estimated at approx. 1 mW
Estimated range	: 25 m in interiors, 200 m in free space
Coding	: 52 Bit 4.5 million billion combinations
Clock resolution	: 1 minute
Clock precision	: ± 150 second/year
No. events/week	: 100
Operating temp. (°C Min. Max.)	: -20 ÷ +55
Dimensions (mm)	: 80x80x12 h
Weight (g)	: 75

Nice Flor, VR, Planotime

NRC

Universal receivers with 1 or 2 channels, **universal modular**, Nice or SM (SMXI) **plug-in** connector **or for universal outdoors IP53**, with step-by-step, timer and anti-burglar functions.

The FloR and VeryVR systems can be interfaced with the BUPC and SMU palm-top devices for an easy programming and management of the codes.

Management of multi-user system through the unique, personal code: the recognition receivers can receive and memorise up to 63 codes with BM250, 255 with BM1000 and 1020 when the modular receiver is equipped with 4 memory cards.

Memorisation: a particular receiver output can be associated to each transmitter key (e.g. key 3 TX= output 1 RX).

The aerial can be incorporated in the Lucy flashing light or in the universal outdoor IP53 receiver, or fixed with a bracket.

Receivers

Universal

Code	Description	Pc/Pack
FLOX1R	1 channel with BM250 memory	1
FLOX2R	2 channels with BM250 memory	1

Universal IP53 for outdoors

Code	Description	Pc/Pack
FLOXB2R	2 channels with BM250 memory for ABKIT	1

With Nice plug-in

Code	Description	Pc/Pack
FLOXIR	1 channel with BM250 memory	1
FLOXI2R	2 channels with BM250 memory	1

With SM plug-in

Code	Description	Pc/Pack
SMXI	Up to 4 channels with 256-codes memory	1

Universal SM pre-wired

Code	Description	Pc/Pack
SMX2R	2 channels with 256-codes memory, pre-wired	1

Universal modular

Code	Description	Pc/Pack
FLOXMR	4 channels with an MXD channel module and BM1000 memory, 24 V	1
FLOXM220R	4 channels with an MXD channel module and BM1000 memory, 230 Vac	1

Technical specifications

	Carrier frequency (MHz)	Reception frequency (Ohm)	Sensitivity	Power supply	Absor. when quiescent	Decoding	Number of channels	Relay contact	Dimensions (mm)
FLOX1R	433.92 SAW controlled	52	> 0.5 µV for a good signal	from 12 to 28 Vac - dc	15 mA	52 digital bits (4.5 million billion comb.)	1	normally open max. 0.5 A 50 Vac	98x41x25 h
FLOX2R							2		
FLOXB2R									105x68x32 h
FLOXIR							1		67x34x18 h
FLOXI2R							2		
FLOXMR							up to 4		118x54x148 h
FLOXM220R				230 Vac ±10%	2 VA				
SMXI	433.92 quartz controlled			5 Vdc	-		4	-	50x18x46 h
SMX2R				from 12 to 28 Vac - dc	10 mA		2	normally open max. 0.5 A 50 Vac	86x57x22 h

Accessories

Memory card

Code	Description	Pc/Pack
BM250	63 codes memory for FloR and VeryVR receivers	5
BM1000	255 codes memory for FloR and VeryVR receivers	5

Channel units for the modular receivers in all series

Code	Description	Pc/Pack
MXD	Impulsive	4
MXP	Step-by-step	2
MXT	Adjustable timer from 3 seconds to 5 minutes	2

Professional, tuned directional aerial

Code	Description	Pc/Pack
ABF	Bracket mounted	1
ABFKIT	Can be incorporated in the FLOXB2R receivers and in Lucy flashing light	1

Batteries

Code	Description	Pc/Pack
B3V	3 V lithium battery for VR transmitter	20
B12V-A	12 V alkaline battery for FLO1R-S/SC, FLO2R-S/SC/M and FLO4R-S/SC/M	50
B3VB	3 V lithium battery for Planotime	25

Programming unit

Code	Description	Pc/Pack
BUPC	Programming and code control unit for the FloR, VeryVR, Bio series complete with PC connecting cable, communication software, connectors for cloning transmitters and advanced code management functions	1
MOU	Programming and code control unit for MORX decoder; complete with PC connecting cable, communication software and advanced code management functions	1

Technical specifications

	Reception frequency (MHz)	Impedance (Ohm)	Bracket	Cablec
ABF	433.92	50	stainless steel	RG 58
ABFKIT			-	-

	Power supply	Communication	Consumption (mA)	Dimensions (mm)
BUPC	9 V internal battery inside 12 Vdc external source	interface RS232 standard, 9600Bps N,8 1	10	210x100x25 h
MOU				

Nice Smilo

NRC

433.92 MHz rolling code radio-controlled system with self-learning function.
18 billion billion combinations.
Universal pre-wired receivers for easy and rapid installation.

Maximum safety, ease of use and installation.

The system includes:

transmitters 2 or 4 channels (SM2, SM4);

universal pre-wired receiver with 2 channels (SMX2) or with plug-in (SMXIS);

variable rolling code transmission code: absolutely secure because it's absolutely impossible to clone the transmitter!

Self-learning function;

the codes can be entered at a distance with an authorised transmitter or with a programming button on the receiver while a Led displays the different functions;

Memorisation: a particular receiver output can be associated to each transmitter key (e.g. key 3 TX= output 1 RX).

Code	Description	Pc/Pack
SM2	2 channels	2
SM4	4 channels	2

Technical specifications

Carrier frequency	: 433.92 MHz ±100 KHz
Estimated range	: 150 - 200 m with aerial tuned in free space
Coding	: 64 digital bits (18 billion billion combinations)
Power supply	: 12 Vdc + 20% - 40% with battery 23 A
Average absorption (mA)	: 25
Dimensions (mm)	: Ø 48x14 h

Receivers

Universal pre-wired

Code	Description	Pc/Pack
SMX2	Pre-wired 2 channels with 256 codes memory	1

With SM plug-in

SMXIS	Up to 4 channels with 256 codes memory	1

Accessories

Professional, tuned directional aerial

Code	Description	Pc/Pack
ABF	Bracket mounted	1
ABFKIT	Can be incorporated in Lucy flashing light	1

Batteries

Code	Description	Pc/Pack
B12V-A	12 V alkaline battery for SM2, SM4 transmitters	50

Technical specifications

	Carrier frequency (MHz)	Reception frequency (Ohm)	Sensitivity	Power supply	Absor. when quiescent (mA)	Decoding	Number of channels	Relay contact	Dimensions (mm)
SMX2	433.92 quartz controlled	52	> 0.5 µV for a good signal	from 12 to 28 Vac - dc	10	64 digital bits (18 billion billion comb.)	2	normally open max. 0.5 A-50 Vac	86x57x22 h
SMXIS				5 Vdc			up to 4	-	50x18x46 h

	Reception frequency (MHz)	Impedance (Ohm)	Bracket	Cable
ABF	433.92	50	stainless steel	RG 58
ABFKIT			-	-

Nice Flo & VeryVE

NRC

FLO1

FLO2

FLO4

Dashboard support (standard supply)

Flo, 433.92 MHz radio-controlled system with programmable code 1024 dip switch combinations.

Flo differs from FloR as it is produced in the classical Nice blue.

The system includes:

Transmitters with 1, 2, 4 channels (FLO1, FLO2, FLO4);

Universal **receivers** with 1 or 2 channels, universal modular, Nice plug-in connector or for universal outdoors IP53;

The aerial can be incorporated in the Lucy flashing light or in the universal outdoor IP53 receiver, or fixed with a bracket.

VeryVE, 433.92 MHz radio-controlled system with programmable code, 2 channels, 1024 combinations.

2 channel version, designed to dialogue with the Flo series, and consequently the CVU programming system. VeryVE differs from the VR series as it is produced in the classical Nice blue. Dip-switch programmable by radio control buttons.

Smart, fully-developed design, created specially to be the ideal transmitter for your car or handbag.

A **handy support** for fixing Very inside your car is also supplied.

Small, slender: can be kept in your handbag or used as an elegant key ring.

The lithium battery is easy to replace: 3 year battery life.

Code	Description	Pc/Pack
FLO1	1 channel	10
FLO2	2 channels	10
FLO4	4 channels	10
VE	2 channels	10

Technical specifications	**Flo**	**VeryVE**
Carrier frequency	: 433.92 MHz ±100 KHz	: 433.92 MHz ±100 KHz
Estimated range	: 100 - 150 m with aerial tuned in free space	: 100 - 150 m with aerial tuned in free space
Coding	: digital (1.024 combinations)	: digital (1.024 combinations)
Power supply	: 12 Vdc + 20% - 40% with 23 A battery	: 6 Vdc with lithium battery
Average absorption (mA)	: 15	: 10
Dimensions (mm)	: 72x40x15 h	: 65x30x10 h

Universal receivers with 1 or 2 channels, **universal modular, Nice plug-in** connector **or universal for outdoors IP53.**

The aerial can be incorporated in the Lucy flashing light or in the universal outdoor IP53 receiver, or fixed with a bracket.

Receivers

Universal

Code	Description	Pc/Pack
FLOX1	1 channel	1
FLOX2	2 channels	1

Universal IP53 for outdoors

Code	Description	Pc/Pack
FLOXB2	2 channels for ABFKIT	1

With Nice plug-in

Code	Description	Pc/Pack
FLOXI	1 channel	1
FLOXI2	2 channels	1

Universal modular

Code	Description	Pc/Pack
FLOXM	4 channels with an MXD channel module, 24 V	1
FLOXM220	4 channels with an MXD channel module, 230 Vac	1

Accessories

Channel units for the modular receivers in all series

Code	Description	Pc/Pack
MXD	Impulsive	4
MXP	Step-by-Step	2
MXT	Adjustable timer from 3 seconds to 5 minutes	2

Professional, tuned directional aerial

Code	Description	Pc/Pack
ABF	Bracket mounted	1
ABFKIT	Can be incorporated in the FLOXB2 receivers and in Lucy flashing light	1

Batteries

Code	Description	Pc/Pack
B3V	3 V lithium battery for VeryVE transmitter	20
B12V-A	12 V alkaline battery for FLO1, FLO2 and FLO4	50

Technical specifications

	Carrier frequency (MHz)	Reception frequency (Ohm)	Sensitivity	Power supply	Absor. when quiescent	Decoding	Number of channels	Relay contact	Dimensions (mm)
FLOX1	433.92 MHz SAW controlled	52	> 0.5 µV for a good signal	from 12 to 28 Vac-dc	15 mA	Digital (1.024 comb.)	1	normally open max. 0.5 A-50 Vac	98x41x25 h
FLOX2							2		
FLOXB2									105x68x32 h
FLOXI							1		67x34x18 h
FLOXI2							2		
FLOXM							up to 4		118x54x148 h
FLOXM220				230 Vac ± 10%	2 VA				

	Carrier frequency (MHz)	Impedance (Ohm)	Bracket	Cable
ABF	433.92	50	stainless steel	RG 58
ABFKIT			-	-

Accessories

4|11 The Nice World

12|65 Systems for swing gates

66|85 Systems for sliding gates

86|109 Barrier gate operator systems

110|137 Systems for garage and industrial doors

138|179 Control systems

180|205 Accessories

206|225 Control units

226|229 Product code alphabetical index

Solar power system	186|187	Solemyo
Photocells and safety devices	188|189	Even safer automation
	190|191	FT210
	192|193	F210
System of photocells, key-operated and digital selector switches, transponder readers and controlling entries	194	MoonBus
	195	Moon
	196	MoonTouchBus
	197	MoonTouch
	198	MyMoonBus
	199	MyMoon
	200	MoonKey
	201	Moon Accessories
Flashing light	202	MoonLight
	203	Wallyght
Selector	204	Kio
Programming unit	152|153	O-Box
	205	BUPC, MOU

Nice Selection guide

Follow the arrow and choose the right product

Photocells and safety devices

Synchronised photocells adjustable F210
pages 190/191

- with relay output → **F210**
- with BlueBUS technology → **F210B**

Optical safety devices with wireless transmitter to secure on moveable leaf **FT210**
pages 192/193

- with relay output → **FT210**
- with BlueBUS technology → **FT210B**

Coordinated system of photocells, key-operated and digital selector switches, transponder readers and controlling entries

Synchronised photocells for outdoors
pages 194/195

- directional → **MOF**
- with BlueBUS technology
  - directional → **MOFO**
  - directional → **MOFB**
  - directional → **MOFOB**
  - connection interface for control units which have not been designed for this purpose → **IB**

Digital switches 12 buttons for outdoor installation
pages 196/197

- radio-controlled
  - with FloR rolling code → **MOTXR**
  - with Smilo rolling code → **MOTXS**
- with BlueBUS technology → **MOTB**
- **MOT**
- decoder for MOT digital switch, complete with BM1000 memory card for 255 combinations. Additional memory also available in order to create a further 255 combinations → **MORX**

Proximity sensor reader for transponder card
pages 198/199

- with BlueBUS technology → **MOMB**
- **MOM**
- decoder for MOM with BM1000 for 255 combinations, additional memory card for others 255 combinations → **MORX**

Key switches
page 200

- with standard cylinder
  - for outdoors → **MOSE**
  - flush-mounted → **MOSI**
- with European cylinder
  - for outdoors → **MOSEU**
  - flush-mounted → **MOSIU**
- without European cylinder
  - for outdoors → **MOSU**

F210

FT210

Moon & MoonBus

MoonTouch & MoonTouchBus

MyMoon & MyMoonBus

MoonKey

Nice Selection guide

Follow the arrow and choose the right product

Flashing light

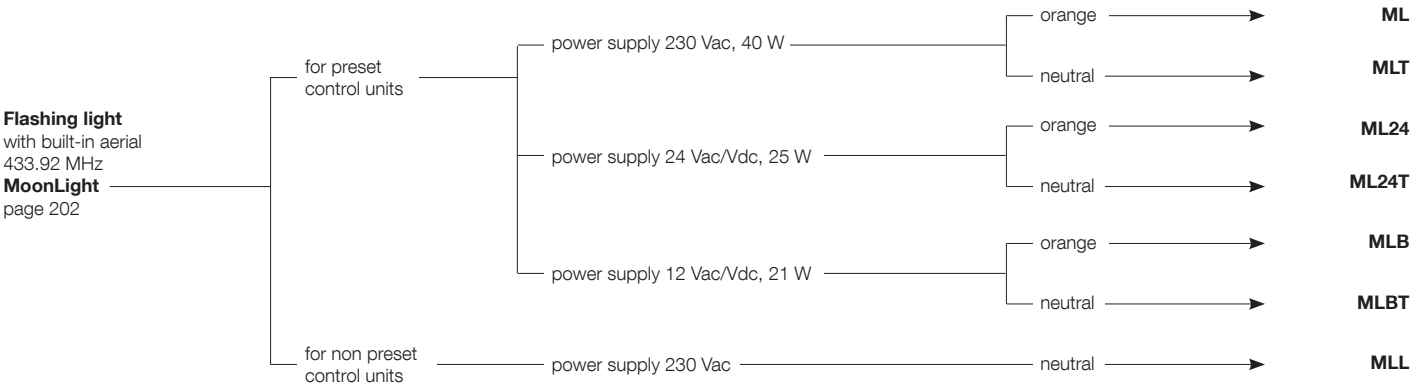

Multi-function Led indicator

Multi-function Led indicator,
flashing light, courtesy light:
or dusk/dawn sensor
12/24 Vac/Vdc.
Wallyght
page 203 → **WLT**

Key-operated selector switch

Key-operated selector switch
for low voltage contacts.
Kio
page 204 → **KIO**

Programming unit

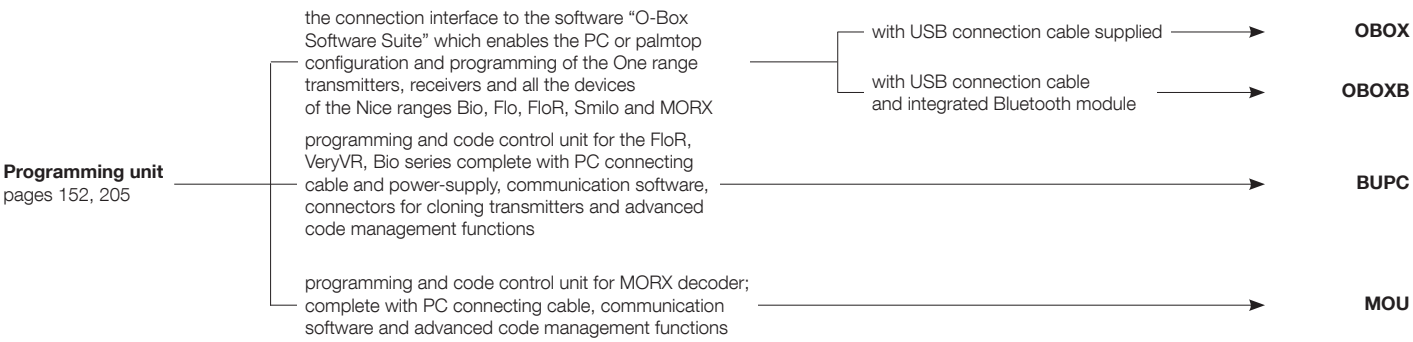

MoonLight

Wallyght

Kio

O-Box

BUPC

MOU

Nice Solemyo

Sole myo 24V

SYKCE

The kit contains:

SYP Photovoltaic solar panel for 24 V power supply.
PSY24 24 V battery box with control circuit and carry handle.

Code	Description	Pack/pallet
SYKCE	Solar power kit comprising SYP photovoltaic panel and PSY24 battery box with charging control circuit	21
SYP	Photovoltaic panel for 24 V supply with maximum power 15 W	
NEW **SYP30**	Photovoltaic panel for 24 V supply with maximum power 30 W	
PSY24	24 V battery box with control circuit and carry handle	

N.B. The content of the package may vary: consult the retailer.

Solemyo is the solar power system for automation systems used on gates, garage doors and road barriers also when located far from the electrical mains.

Simple and rapid installation with guaranteed savings and reliable operation.

Installable anywhere without the need for connections or excavations, even in the most remote locations or those difficult to access with the power mains.

Increased savings and respect for the environment thanks to solar energy, free and clean: an ecological and intelligent choice with short term benefits.

Low consumption with no risk of blackouts: extended duration of energy reserve, combined with low consumption of automations, guarantee operation also in prolonged overcast conditions.

Low consumption with operating autonomy! Perfect operation ensured even at night time or in prolonged overcast conditions, guaranteeing comfort and safety.

Solemyo is available in kit form or sold as single products.

The kit contains the SYP photovoltaic panel that converts sunlight into electricity and the **PSY24 battery box**, storing the electrical energy produced by the SYP panel, with continuous and permanent supply throughout the day.

The SYA1 auxiliary power supply unit enables rapid battery charging via a 230 Vac power mains, as an alternative to the photovoltaic module. Battery charge status Led indicators.

The purchase of single product codes in the Solemyo system is particularly useful when installing two or more solar panels, thus increasing the capacity for system recharging, or using multiple battery packs in combination with the SYA1 power supply unit.

Technical specifications

Code	PSY24	SYP30	SYP	SYA1
Power supply (Vac 50/60 Hz)	-			110 ÷ 240
Rated voltage (V)	24			-
Maximum current (A)	10	-		
Peak power (Wp)	-	30	15	-
Maximum power (W)	-			60
Rated battery capacity (Ah)	20	-		
Protection level (IP)	44	-		
Working temp. (°C Min/Max)	-20 ÷ +50*	-40 ÷ +85		0 ÷ +40
Complete recharging time (hours)	~ 15**	-		
Dimensions (mm)	235x170x258 h	450x25x550 h	390x28x415 h	132x58x30 h
Weight (kg)	14	3.5	1.9	0.345

* 0 ÷ 40 if recharged from the power mains with SYA1 power supply unit.
** Using the power supply unit via the mains.

Flexible: Solemyo adapts perfectly to all types of installation.

Nice recommends customers order products in pallets in order to facilitate storage and delivery, and ensure packs are uniform. The number of packs per single pallet has been specified for this reason. Approximate draft.

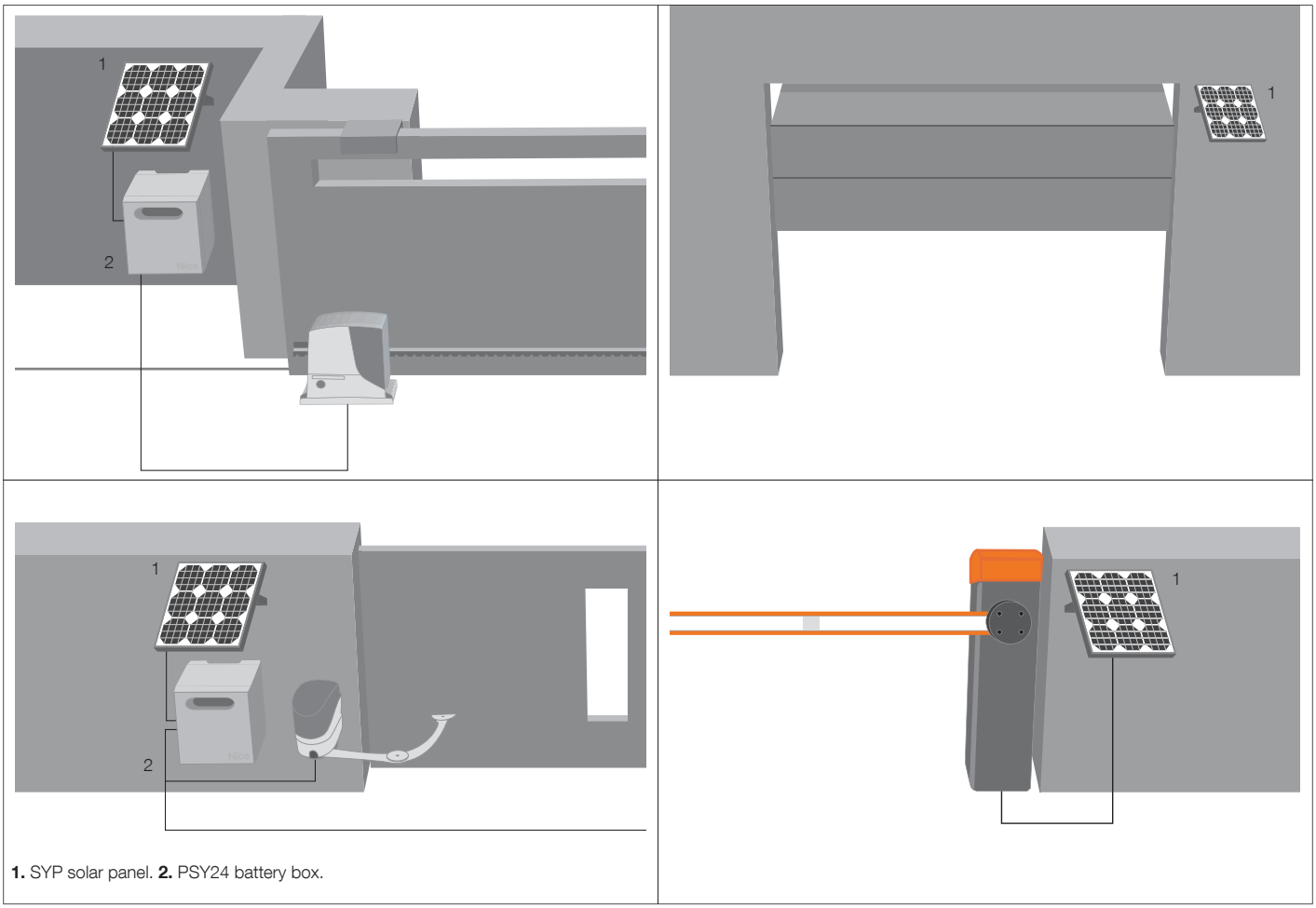

1. SYP solar panel. **2.** PSY24 battery box.

Accessories

SYA1
Power supply unit for charging the battery PSY24 from the supply mains.

Pc/pack 1

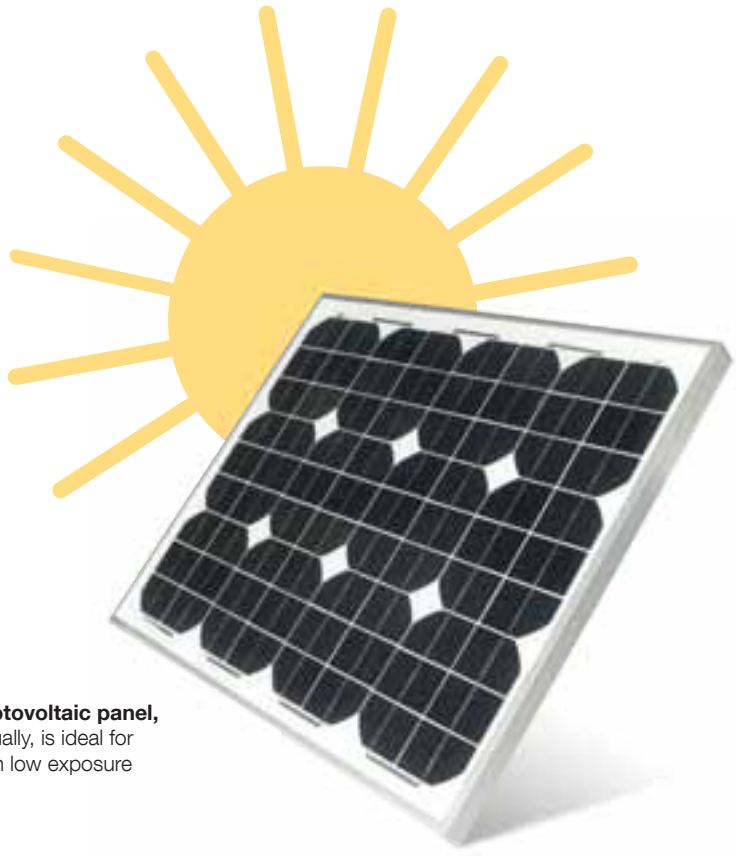

The SYP30 photovoltaic panel, available individually, is ideal for all situations with low exposure to the sun.

Nice Even safer automation

8.2 KOhm resistive sensitive edges, maximum safety and control of the automation.

Safer: if there are any faults in the system like, for example, the product itself has broken down, the edges will communicate this to the control unit. The TCE interface board enables users to connect sensitive edges (with 8.2 KOhm resistance) to those control units which are not equipped with a special input.

The length can be personalised: the components supplied in the kits enable installers to build sensitive edges of the correct dimension.

Practical: they adapt to any kind of situation and can be installed quickly.

Reliable: the new Class3 technology means that the control unit, the sensitive edges are connected to, can understand if the device is functioning correctly, or if it is out of use.

8.2 KOhm analogical-type input.

Resistive sensitive edges and accessories

Code	Description	Pack
TCB65	Sensitive edge in 10 m rolls	1
TCK	Kit putting together 8 sensitive edges complete with:	
	- Terminal caps (TCT65)	16
	- Connectors, complete with cable L=250 cm (TCS250)	8
	- Connectors 8.2 KOhm (TCER)	8
	- Tin of glue (TCC)	1
	- Tin of primer (TCP)	1
TCF	Scissors for cutting safety sensitive edges	1
TCA65	Aluminium profile L=200 cm	5
TCE	Control interface for sensitive edge	1

Electrical connection devices for safety sensitive edges on moveable leafs

Code	Description	Pack
DBM5	Complete kit for gates up to 5 m	1
DBM7,5	Complete kit for gates up to 7.5 m	1
DBM10	Complete kit for gates up to 10 m	1

Instruments and software for force impact measurement

Code	Description
NSFB	BlueForce instrument for measuring the impact force compliant with EN12445, with Bluetooth/USB interface and Software included, complete with carry case
NSFS	SpeedForce instrument for measuring the impact force compliant with EN12445, with USB interface and software included complete with carry case
NSEL	Straight extension for measurements from 30 to 50 cm, applicable on NSFB and NSFS
NSEA	Angular extension for measurements from 1.25 to 2.50 m, applicable on NSEL
NSSWPDA	BlueForce PDA software for Pocket-PC, for NSFB

Mechanical sensitive edges, more safety and easy installation.

CMA is the pre-assembled, high mechanical edge consisting in aluminium profiles of 1.5 - 1.7 - 2 - 2.5 m in length; ideal for assembly on sliding or swing gates.

CMBK is the kit for installing a low mechanical edge: for edges max. 4 m (CMBK4) and for edges max. 6 m (CMBK6), ideal for garage doors in general, up-and-over and sectional doors.

CB is a protective rubber pad. Fitted to the CMBK4/CMBK6 kit, it forms the low mechanical edge.

Mechanical sensitive edges

Code	Description	Pack
	High mechanical edge with aluminium profiles in sections measuring 1.5 - 1.7 - 2 - 2.5 m in mm 36x75 h:	
CMA 1,5MT	Length 1.5 m	1
CMA 1,7MT	Length 1.7 m	1
CMA 2MT	Length 2 m	1
CMA 2,5MT	Length 2.5 m	1
CB	Protective rubber pad for low rolled mechanical edge and aluminium profiles in sections measuring 2 m; dimensions in mm 23x44 h	40
CMBK4	Kit for installing a low mechanical edge, with aluminium profiles measuring 4 m (to use together with CB)	1
CMBK6	Kit for installing a low mechanical edge, with aluminium profiles measuring 6 m (to use together with CB)	1

Passive sensitive edges

Code	Description	Pack
TCBS60	Passive sensitive edge in 10 m rolls	1

Nice Inductive magnetic detector loop

Magnetic sensor for the detection of metal objects

Simple and safe: operation and parameters are easily controlled, checked and programmable via the LCD display.

Quick and versatile: unlimited functions and simple, intuitive programming.

Integrated measurement system
Automatic indication of loop inductance.

Code	Description	Pack
LP1	Single-channel metal mass detector 24 V power supply	1
LP2	Two-channel metal mass detector 24 V power supply	1

Nice FT210

Code	Description	Pc/Pack
FT210	Pair of optical devices for sensitive edges fastened on moving door, can be swivelled through 210° with relay output. Battery kit (FTA1/FTA2) compulsory	1
FT210B	Pair of optical devices for sensitive edges fastened on moving door, can be swivelled through 210° with BlueBUS technology. Battery kit (FTA1/FTA2) compulsory	1

Optical device, with wireless transmitter to secure on moveable leaf, horizontally adjustable through 210° and 30° vertically, for an automation according to Standards.

Consideration towards personal safety and product quality.
The safety level of the main edge, required by the EN12453 standard, can be achieved for any “type of use” and any “type of activation” by integrating a FT210/FT210B device to an 8.2 KOhm TCB65 type resistive sensitive edge.
The FT210/FT210B device, integrated with a “resistive” sensitive edge (8.2 KOhm), is safe against individual faults (category 3 according to the EN 954-1 standard) or can be used with automated systems with self-diagnosis at the start of every manoeuvre (category 2 according to the EN 954-1 standard).

Additional models
Versions with relay output (FT210), with Nice BlueBUS technology (FT210B), available with 2 Ah (FTA2) and 7Ah (FTA1) battery Kit, for intensive use.

Cutting-edge technology
The anti-collision circuit avoids interference with other out-of-sink receivers.
The FT210/FT210B optical devices are equipped with a special sensor capable of recognizing when the gate is motionless, which remains in a low consumption mode and activates only when the gate is in motion.
Range adjustable on 2 levels; alignment with proportional Led for easy and safe installation.

Suitable for any architectural environment and easy to install
Reduced dimensions: 46x128x45; electrical connections can also be made from the lower section of the box.

Resilient and safe
Polycarbonate casing;
FA1 vandal-proof metal shell (optional);
low transmitter battery indicator.

Technical specifications

	Estimated range (m)	Power supply	Absorption	Protection rating (IP)	Working temp. (°C Min/Max)	Range relè	Dimensions (mm)	Weight (g)
FT210	10 (residential), 15 (industrial)	RX: 12-24 Vac/Vdc limits: 18-35 Vdc, 10-28 Vac TX: 3.6 V lithium battery	RX: 120 mA - 12 V, 70 mA - 24 V TX : 20 uA gate not moving, 450 uA gate operating	44	-20 ÷ +55	max 500 mA and 48 V	46x45x128 h	300
FT210B		RX: the device can only be connected to “BlueBUS” networks	1 BlueBUS unit TX : 20 uA gate not moving, 450 uA gate operating			-		280

Gates

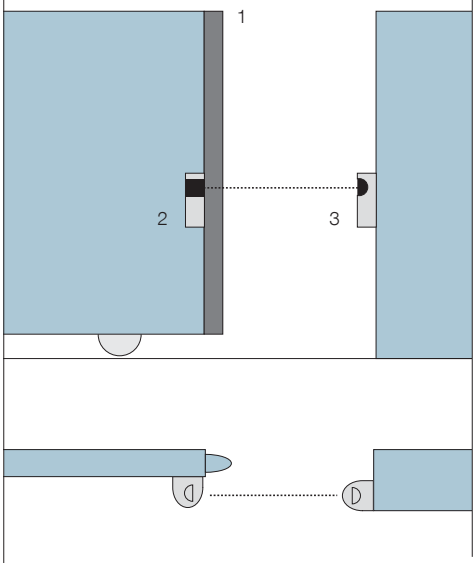

Garage doors

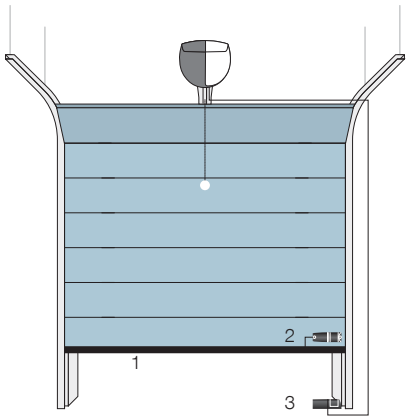

Grilled rolling shutters

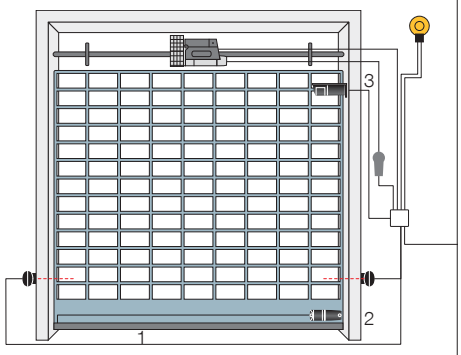

1. TCB65, resistive sensitive edges **2.** Tx FT210 power supply with battery **3.** Rx FT210.

Accessories

Code	Description	Pc/Pack
FA1	Vandal-proof metal shell	2
FA2	Bracket for fixing to MOCF and MOCF2 columns	5
FTA1	7 Ah battery kit for FT210/FT210B transmitters, for intensive use	1
FTA2	2 Ah battery kit for FT210/FT210B transmitters	1
MOCF2	Aluminium post for 2 photocells, 1000 mm high	2
MOCF	Aluminium post for 1 photocell, 500 mm high	2

Nice F210

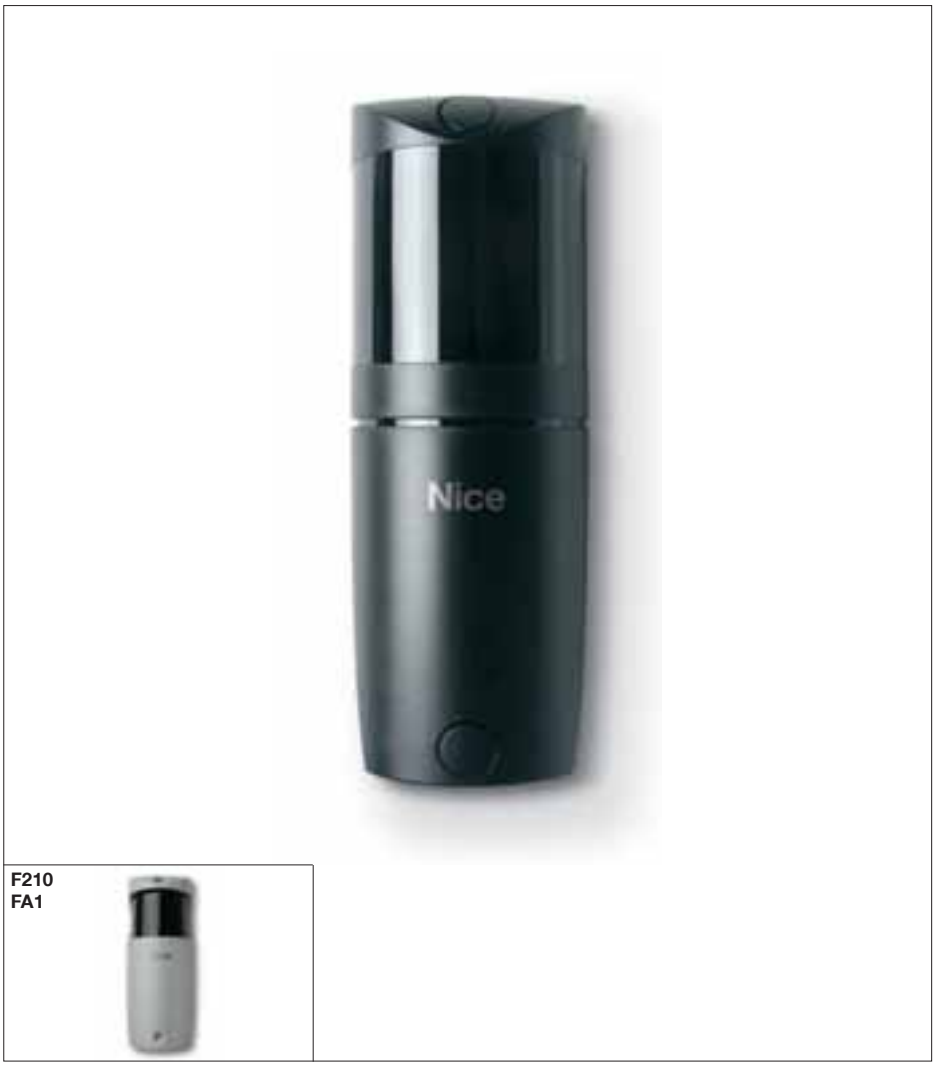

F210
FA1

Synchronised photocells horizontally adjustable through 210° and 30° vertically. Simply perfect installations.

The 210° solution
The beam of the Nice F210 and F210B photocells has a horizontal scope of 210°, thereby increasing the safety level of the system and simplifying installation: the gate or garage door to be automated quite often slide flush with the wall making it very difficult to position the photocell.

Numerous models and countless advantages
The new photocells are available with relay output (F210) or with the Nice BlueBUS technology (F210B).
With the BlueBUS technology, all devices can be easily connected to the control unit with just two wires.
Sensors with the BlueBUS technology can be connected to incompatible control units by means of an IB interface.
The devices that are connected to the BlueBUS network are automatically acquired by the system.

Suitable for any architectural environment and easy to install
Reduced dimensions: 46x128x45 mm; electrical connections can also be made from the lower section of the box.

Resilient and safe
Polycarbonate casing;
FA1 vandal-proof metal shell (optional).

Cutting-edge technology
The problem of interference between the sensors and the automatic synchronisation between several pairs of photocells is solved by the anti-blinding circuit; high range adjustable on 2 levels; synchronising circuit; alignment with proportional Led for easy and safe installation.

Code	Description	Pc/Pack
F210	Pair of synchronised photocells adjustable through 210°, with relay output	1
F210B	Pair of synchronised photocells adjustable through 210°, with the Nice BlueBUS technology	1

Technical specifications

	Estimated range (m)	Power supply	Absorption	Protection rating (IP)	Working temp. (°C Min/Max)	Range relè	Dimensions (mm)	Weight (g)
F210	10 (30 with jumper cut)	without jumper 24 Vac/Vdc limits: 18-35 Vdc, 15-28 Vac with jumper 12 Vac/Vdc limits: 10-18 Vdc, 9-15 Vac	25 mA RX, 30 mA TX	44	-20 ÷ +55	max 500 mA and 48 V	46x45x128 h	230
F210B		the device can only be connected to "BlueBUS" networks	1 BlueBUS unit			-		

Accessories

Code	Description	Pc/Pack
IB	Interface for connecting BlueBUS F210B photocells up to control units which have not been manufactured for this purpose	1
FA1	Vandal-proof metal shell	2
FA2	Bracket for fixing to MOCF and MOCF2 columns	5
MOCF2	Aluminium post for 2 photocells, 1000 mm high	2
MOCF	Aluminium post for 1 photocell, 500 mm high	2

Technical specifications

	Power supply	Current draw with 24 Vdc power supply	Current draw with 24 Vdc power supply	BlueBUS output	Protection rating (IP)	Working temp. (°C Min/Max)	Dimensions (mm)	Weight (g)
IB	16÷35 Vdc 18÷28 Vac	50 mA (add approx. 50 mA for each pair of photocells)	44 mA (add approx. 44 mA for each pair of photocells)	one with maximum load of 9 BlueBUS units	30	-20 ÷ +55	86x58x22 h	72

Nice MoonBus

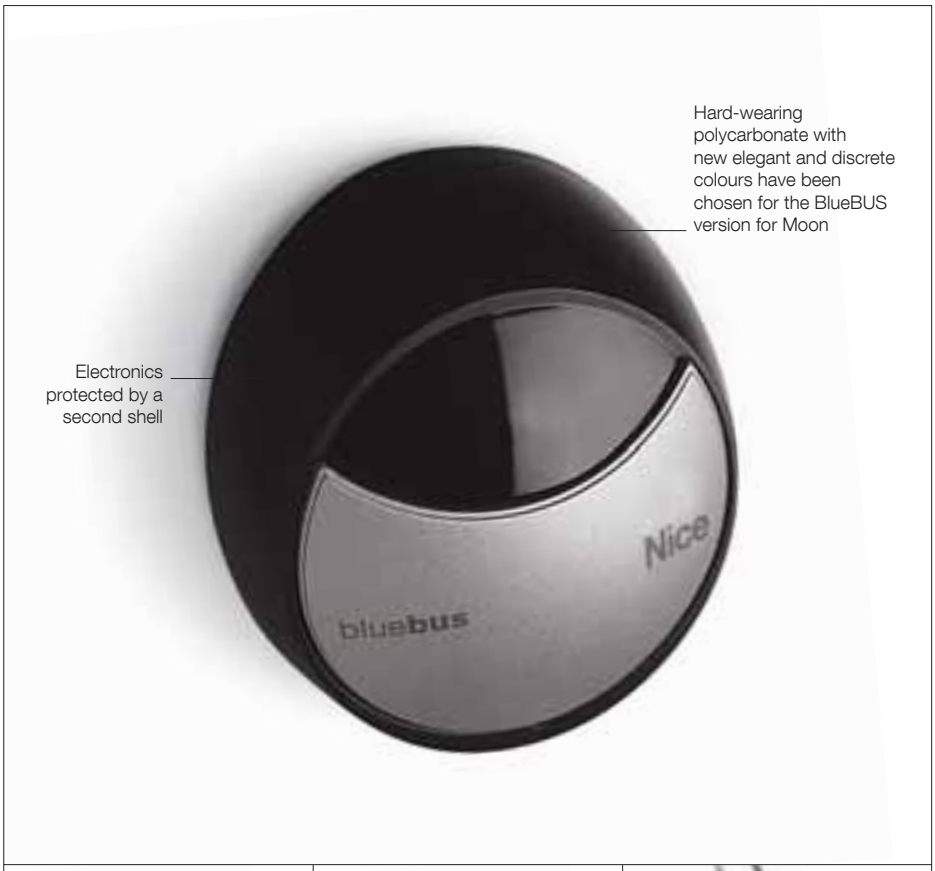

Fixed or adjustable, synchronised photocells with BlueBUS technology.

The MOFB and MOFOB photocells are obstacle detectors which make it possible to detect obstacles on the optical axis between a transmitter (TX) and a receiver (RX), type D according to Standard EN12453. They can be used in automations for gates and doors.

These devices are equipped with the **BlueBUS** communication system which makes it easy to connect all the devices up to the control units using two wires only. They are all quite simply connected up in parallel, and the addressed jumpers selected according to the function required.

Cutting-edge technology: an anti-blinding circuit that makes it possible to solve the problem of interference between the detectors and automatic synchronisation between several couples of photocells.

The **MOFOB** version, which can be adjusted, will solve the problem of compensating centring gaps up to 30°.

IB Interface: enables the user to connect obstacle detectors using BlueBUS technology (MOFB and MOFOB photocells) and control units with inputs for traditional, photocell contacts. The system automatically recognizes the devices connected to the BlueBUS network. The phototest function enables users to achieve Safety Category 2 against faults according to Standard EN 954-1.

Code	Description	Pc/Pack
MOFB	Surface-mounted pair of photocells for connection by Nice BlueBUS	1
MOFOB	Pair of adjustable 30°, surface-mounted photocells for connection by Nice BlueBUS	1
IB	Interface for connecting BlueBUS MOFB and MOFOB photocells up to control units which have not been manufactured for this purpose	1

Technical specifications

	Power supply/output	Adjustability of the photocell	Estimated range (m)	Protection rating (IP)	Working temp. (°C Min/Max)	Dimensions (mm)	Weight (g)
MOFB	the device can only be connected to "BlueBUS" networks, from which it receives its power supply and sends output signals	-	up to 15 m for a maximum TX-RX misalignment of ± 5° (the device can detect and signal an obstacle even in particularly bad weather conditions)	55	-20 ÷ +55	69x25x78 h	50
MOFOB		approximately 30° along the horizontal and vertical axes				69x37x78 h	75

	Power supply	Current draw with 24 Vdc power supply	Current draw with 24 Vdc power supply	BlueBUS output	Protection rating (IP)	Working temp. (°C Min/Max)	Dimensions (mm)	Weight (g)
IB	16÷35 Vdc 18÷28 Vac	50 mA (add approx. 50 mA for each pair of photocells)	40 mA (add approx. 40 mA for each pair of photocells)	one with maximum load of 9 BlueBUS units	30	-20 ÷ +55	86x58x22 h	72

Nice Moon

Synchronised photocells with a 10° receiving angle (MOF) also available in a 30° version adjustable in each direction (MOFO).

Ultra-thin:
just 28 mm (adjustable version: 38 mm).

Extremely hard-wearing:
transparent polycarbonate casing.

2 range levels.

Synchronisation circuit.

Alignment with proportional Led for safe and easy installation.

Code	Description	Pc/Pack
MOF	Pair of surface-mounted photocells	1
MOFO	Pair of adjustable 30°, surface-mounted photocells	1

Technical specifications

	Estimated range (m)	Power supply	Absorption (mA)	Protection rating (IP)	Working temp. (°C Min/Max)	Range relè	Dimensions (mm)	Weight (g)
MOF	15 (30 with jumper + "10 m" cut)	without jumper 24 Vac/Vdc limits 18-35 Vdc, 15-28 Vac with jumper 12 Vac/Vdc limits 10-18 Vdc, 9-15 Vac	25 RX, 30 TX	54	-20 ÷ +55	max 500 mA and 48 V	69x25x78 h	55
MOFO							69x37x78 h	80

Nice MoonTouchBus

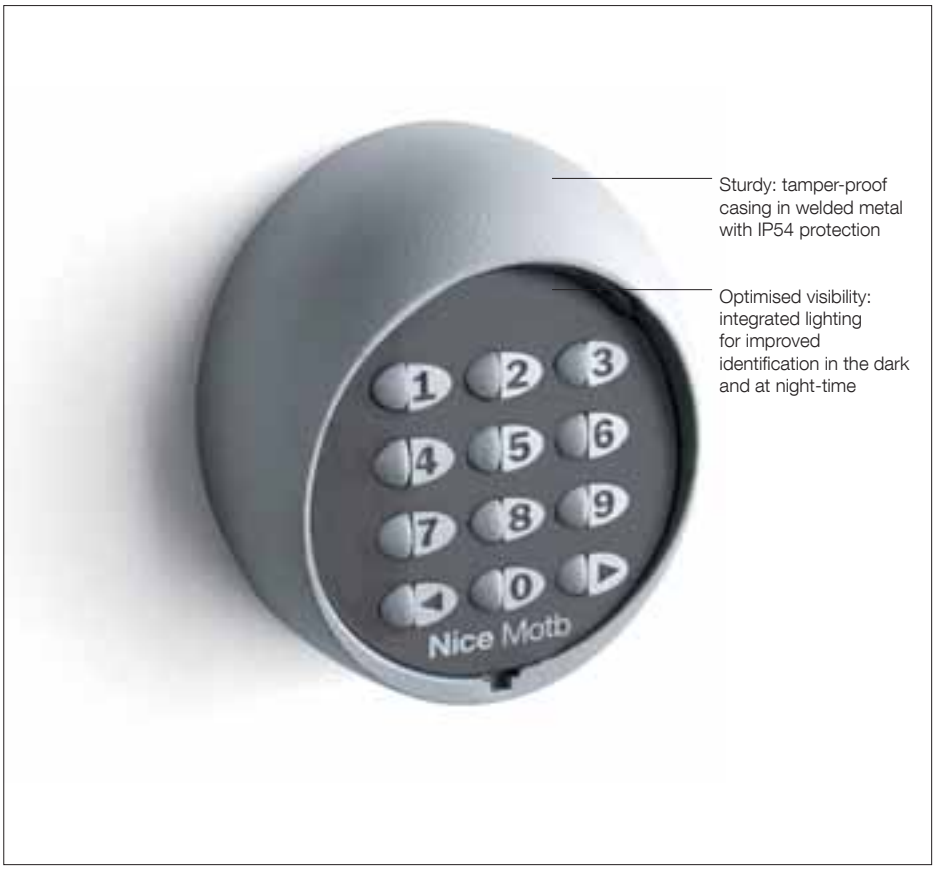

Code	Description	Pc/Pack
MOTB	12-key digital selector, in aluminium, with Nice BlueBUS technology	1

12-key digital selector with Nice BlueBUS connection technology.

Exclusive functions:

- 2 keys to activate two different commands selected from 6 available (for example step-step, close, open), depending on which control unit is connected;
- 255 combinations for storage on BM1000 memory;
- 2 programming modes: Easy or Professional;
- up to 4 MOTB and MOMB control devices connectable via BlueBUS, also in combined configurations;
- possibility of programming the number of times a specific combination can be used;
- possibility of enabling an automation block/unblock function.

Simple installation: easy and rapid connection with just 2 wires, no polarity, to complete the BlueBUS systems.

Safe: the combination is a number consisting in 1 to 9 figures, resulting in 99,999,999 possible combinations!

Two different visual indicators according to automation status:
- red: automation closed or in closing phase;
- green: during opening or when the “automation block” function is active.

Easy programming: with MOU palmtop or O-Box interface, extremely simple management of any type of programming of the BM1000 memory in the vicinity of the system, or remotely, directly from the installer’s office.
MOU and O-Box interface with the PC, enabling efficient archiving of all installations.

Technical specifications

	Power supply	Absorption	Protection rating (IP)	Dimensions (mm)
MOTB	via BlueBUS	1.5 BlueBUS unit	54	70x30x80 h

Nice MoonTouch

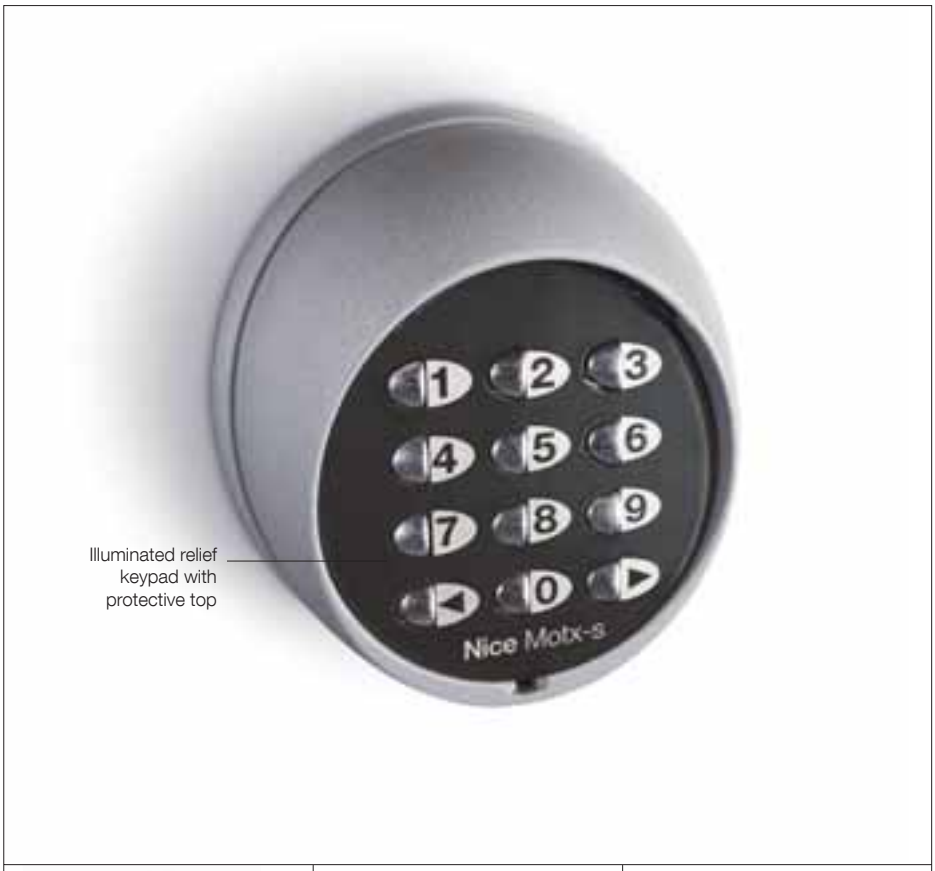

12-key digital switch with 2-wire connection to decoder or radio-controlled.

MOTXR: radio coding digital switches with 52 bit FLOR rolling code;
compatible with FloR and VeryVR transmitters, rolling code 4.5 million billion combinations, with self-learning function.

MOTXS: radio coding digital switches with 64 bit Smilo rolling code;
compatible with Smilo transmitters, with 64 bit rolling-code, generates 18 billion million combinations, with self-learning function.

Complete: 2 transmission channels to control 2 automations.

Convenient: no wiring necessary; estimated range: 200 m outdoors and 35 m indoors.

Safe: the combination is a number consisting in 0 to 8 figures, resulting in 99,999,999 possible combinations!

Cheap: extra low consumption, the transmission will activate when the user presses the key, and switch itself off automatically.
The ambient brightness sensor only activates keypad lighting when necessary.

Sturdy: vandal-proof die-cast aluminium casing, IP54.

MOT: digital switch with 2-wire connection to decoder

- 255 combinations can be entered out of a total of 999,999,999, expandable to 510;
- 2 channels;
- 2 programming modes: Easy or Professional;
- programmable output functions with pulse relay, bistable or timed relay, anti-theft feature;
- up to 4 switches can be connected by cable to the same receiver, with different active combinations.

Easy programming: with MOU palmtop or O-Box interface, extremely simple management of any type of programming of the BM1000 memory in the vicinity of the system, or remotely, directly from the installer's office.
MOU and O-Box interface with the PC, enabling efficient archiving of all installations.

MOTXR
MOTXS

MOT

MORX

Code	Description	Pc/Pack
MOTXR	Radio-controlled digital switch compatible with FloR series of receivers 2 channels	1
MOTXS	Radio-controlled digital switch compatible with Smilo series of receivers 2 channels	1
MOT	12-key, aluminium digital switch, for combination with decoder MORX	1
MORX	Decoder for 1 MOM or 4 MOT connected in parallel with memory BM1000 for 255 combinations	1
BM1000	Additional memory card for others 255 combinations	5

Technical specifications

	Power supply	Battery life	Frequency	Radiated power	Radio coding	Working temp. (°C Min/Max)	No. of figure combination	Estimated range (m)	Protection rating (IP)	Dimensions (mm)	Weight (g)
MOTXR	6 Vdc with 2 CR2430 type lithium batteries	estimated at 2 years, with an average number of 10 transmissions a day	433.92 MHz ± 100 KH	estimated at approximately 1 mW e.r.p.	rolling code 52 bit FloR	-20 ÷ +55	from 0 to 8	200; 35 if inside buildings	54	75x35x85 h	150
MOTXS					rolling code 64 bit Smilo						

	Night operation	Protection rating (IP)	Dimensions (mm)	Weight (g)
MOT	a red/green light will illuminate the keys	54	70x30x80 h	237

	Power supply memory	Power supply	Max. absorbed power	Protection rating (IP)	Working temp. (°C Min/Max)	Dimensions (mm)	Weight (g)
MORX	2 BM10000 for max. 510 MOCARD/MOCARDP FLOR-M or combinations	10÷35 Vdc, 12÷28 Vac	24 Vdc=70 mA 24 Vac=200 mA 12 Vdc=150 mA 12 Vac=300 mA (with 1 MOM or 4 MOT)	30	-20 ÷ +55	98x42x25 h	65

Nice MyMoonBus

MOCARD
MOCARDP

HSB1

Proximity reader for transponder cards and badge and Flor-m bimodal transmitters, with Nice BlueBUS connection technology.

Exclusive functions:

- 255 card/badge capacity;
- 2 programming modes: Easy or Professional;
- reading distance 4-8 cm;
- enables the entry of which type of cards/badge are enabled on the system: both, MOCARD only or MOCARDP only;
- possibility of programming the number of times a specific card/badge can be used;
- possibility of enabling an automation block unblock function;
- up to 4 MOTB and MOMB control devices connectable via BlueBUS, also in combined configurations;
- 2 modes (static and dynamic) to activate two different controls selected from 6 available (for example step-step, close, open) according to the control unit connected.

Simple installation: easy and rapid connection with just 2 wires, no polarity, to complete the BlueBUS systems.

Easy programming: with MOU palmtop or O-Box interface, extremely simple management of any type of programming of the BM1000 memory in the vicinity of the system, or remotely, directly from the installer's office.
MOU and O-Box interface with the PC, enabling efficient archiving of all installations.

New transponder badge.
A practical badge that can be attached to a key-ring for availability at all times.

Code	Description	Pc/Pack
MOMB	Proximity reader for transponder cards, with Nice BlueBUS technology	1
MOCARD	Transponder card	10
MOCARDP	Transponder card programmable via MOU palm-top, with sequential code for multiple insertion	10
HSB1	Transponder badge reprogrammable via MOU palmtop, with sequential encoding, for multiple entries	10

Technical specifications

	Power supply	Absorption	Detection range (cm)	Protection rating (IP)	Dimensions (mm)
MOMB	via BlueBUS	2 BlueBUS unit	from 4 to 8	55	69x26x78 h

Nice MyMoon

MOM

MOCARD
MOCARDP

HSB1

MORX

Proximity sensor for transponder cards and badge and for Flor-m bimodal transmitters, with 2-wire connection to decoder.

Exclusive functions:

- 255 cards/badge can be entered with a single code, expandable to 510;
- 2 channels;
- 2 programming modes: Easy or Professional;
- programmable output functions with instantaneous relay, bistable relay, timer, anti-theft feature;
- can be connected by cable to 1 proximity sensor;
- reading distance 5-10 cm;
- hard-wearing polycarbonate;
- Led enabling the user to see the device in the dark;
- it is possible to change the operations counter associated with a given card present in the memory;
- enables the user to change in the memory the parameter relative to the type of card/badge the decoder will be able to recognise.
- it is possible to change the code assigned to a given MOCARDP so that it can be programmed in line with specific requirements.

Easy programming: with MOU palmtop or O-Box interface, extremely simple management of any type of programming of the BM1000 memory in the vicinity of the system, or remotely, directly from the installer's office.
MOU and O-Box interface with the PC, enabling efficient archiving of all installations.

New transponder badge.
A practical badge that can be attached to a key-ring for availability at all times.

Code	Description	Pc/Pack
MOM	Proximity reader for transponder badges MOCARD and MOCARDP for combination with decoder MORX	1
MOCARD	Transponder card	10
MOCARDP	Transponder card programmable via MOU palm-top, with sequential code for multiple insertion	10
HSB1	Transponder badge reprogrammable via MOU palmtop, with sequential encoding, for multiple entries	10
MORX	Decoder for 1 MOM or 4 MOT connected in parallel with memory BM1000 for 255 combinations	1
BM1000	Additional memory card for others 255 combinations	5

Technical specifications

	Description	Anti-crushing distance (cm)	Protection rating (IP)	Dimensions (mm)	Weight (g)
MOM	reader for MOCARD, MOCARDP and HSB1	5 ÷ 10	55	69x26x78 h	65

	Power supply memory	Power supply	Max. absorbed power	Protection rating (IP)	Working temp. (°C Min/Max)	Dimensions (mm)	Weight (g)
MORX	2 BM10000 for max. 510 MOCARD/MOCARDP or combinations	10÷35 Vdc 12÷28 Vac	24 Vdc=70 mA 24 Vac=200 mA 12 Vdc=150 mA 12 Vac=300 mA (with 1 MOM or 4 MOT)	30	-20 ÷ +55	98x42x25 h	65

Nice MoonKey

MOSEU

MOSIU

MOSE

MOSI

MOSU

Key switches with automatic clasp lock, European or standard cylinder.

Die-cast aluminium casing.

Ultra-thin: just 14 mm in the recessed version (39 mm in the surface-mounted version).

Led courtesy light (optional).

Electrical contacts and levers protected by a plastic casing.

Code	Description	Pc/Pack
MOSEU	Surface-mounted key switch, European cylinder	1
MOSIU	Recessed key switch, European cylinder	1
MOSE	Surface-mounted key switch	1
MOSI	Recessed key switch	1
MOSU	Key switch no European cylinder, for outdoor use	1

Accessories

Code	Description	Pc/Pack
MOSA1	Led for MOSE, MOSI, MOSEU, MOSIU, MOSU	5
CHS	Neutral key for MOSE, MOSI	1
CHEU	Neutral key for MOSEU, MOSIU	1

Nice Moon accessories

Accessories

Code	Description	Pc/Pack
MOA1	Box for recessed installation MOSI, MOSIU. It is also suitable for MOF, MOFO, MOT, MOM, MOSE, MOSEU, MOSU	20
MOA2	Finishing kits for installing the MOF, MOFO, MOSE, MOSEU, MOSU, MOT,MOM series over pre-existent fittings. This does not apply to MOTX	3
PCM	Foundation plate for MOCF, MOCF2, MOCS posts	4
MOCA1	Installation accessory MOSE, MOSEU, MOSU MOT, MOM on MOCF2 post	1
MOCS	Aluminium post with protected housing for 1 switch, 1100 mm high	2
MOCF2	Aluminium post with protected housing for 2 photocells, 1000 mm high	2
MOCF	Aluminium post with protected housing for 1 photocell, 500 mm high	2

Nice MoonLight

ML
ML24
MLB

MLT
ML24T
MLBT
MLL

Flashing signal light.

Available with different power supply voltages:
230 Vac, 24 Vdc and 12 Vdc.

Practical: suitable for mounting in any position.

Incorporated 433.92 MHz aerial on all versions.

IP44 protection level.

Available in two colours: orange and neutral.

MLL version, ideal for 230 V control units without provision, connected directly to the power line, this product monitors absorption and is activated automatically when the automation starts to operate.

Dual function: programmable in flashing light or courtesy light mode.

Flashing light: activated when an automation manoeuvre is in progress.

Courtesy light: activated when the automation starts to operate and, thanks to the internal timer, remains activated for a programmable time interval.

Code	Description	Pc/Pack
ML	Orange, 230 Vac, for preset control units	1
MLT	Neutral, 230 Vac, for preset control units	1
ML24	Orange, 24 Vac/Vdc, for preset control units	1
ML24T	Neutral, 24 Vac/Vdc, for preset control units	1
MLB	Orange, 12 Vac/Vdc, for preset control units	1
MLBT	Neutral, 12 Vac/Vdc, for preset control units	1
MLL	Neutral, 230 Vac, for non preset control units. Supplied with one white lamp and one orange lamp	1

Compatibility table

	A0	A0R	A1	A100F	A02	A3	A3F	A400	A500	A6	A6F	A60	A700F	A824	A924	MC824H	MC424L	WALKY	POP	POP7124	HYKE	ROBO 230 Vac	ROBO 24 Vdc	ROAD	ROBUS	RUN	THOR / THOR-Q	TUB	SPIN / SPINBUS	SPIDER / SPIDO	TEN	OTTO 230 Vac	OTTO 24 Vdc	CLIMBER	SOON	X-BAR	SIGNO	WIL
ML / MLT	•	•	•	•	•	•	•	•	•	•	•	•	•									•					•	•				•						
ML24 / ML24T														•	•		•		•				•							•				•			•	•
MLB / MLBT																•		•		•	•			•	•	•			•		•		•		•	•		

Nice Wallyght

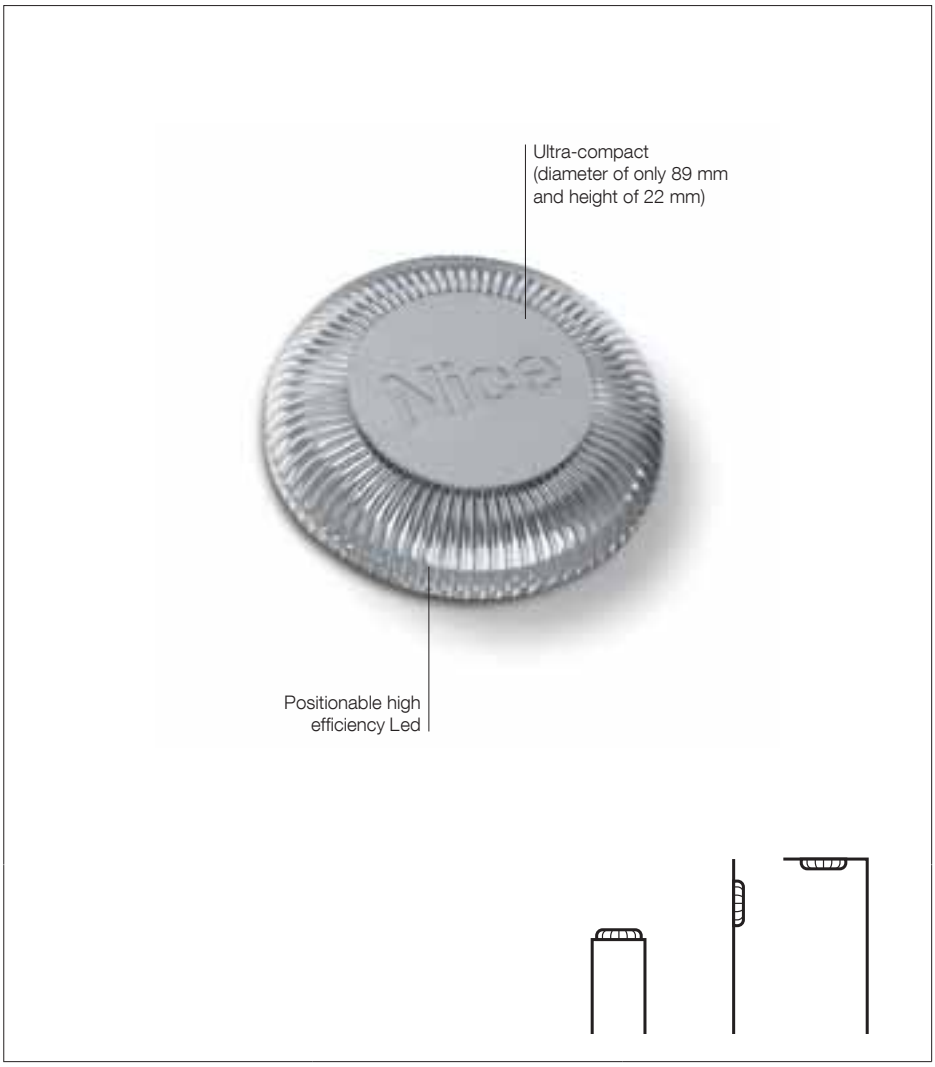

Multi-function Led indicator.

The only version with 12/24 Vac/Vdc power supply and flashing light function, courtesy light function or dusk sensor function.

A new idea for improved safety: when connected to compatible control units, Wallyght can act as a normal flashing light, or provide ambient lighting like a fixed courtesy light. When connected to a 12/24 Vac/Vdc output, Wallyght can remain permanently lit, and also be activated at dusk to then turn off at dawn thanks to the integrated dusk sensor.

Optimal efficiency, extra long life: the two 1 W-Leds guarantee a lifetime of 70.000 hours (continuous use).

Horizontal, wall or ceiling mounting: combined with the possibility of orienting the light beam and compact dimensions of the IP44 box, use of Wallyght is even more flexible.

Code	Description	Pc/Pack
WLT	Multi-function Led indicator	1

Path indicators on entrance pathways

Courtesy light

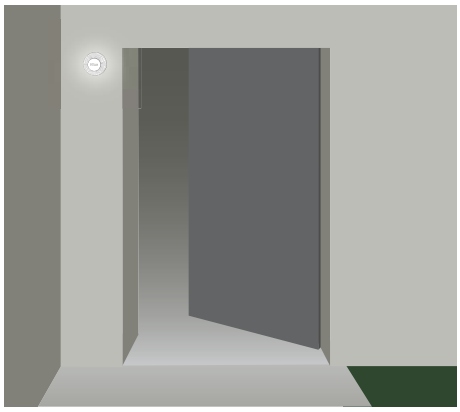

Compatibility table

	A824	A924	MC824H	MC424L	WALKY	POP	HYKE	ROBO 24 Vdc	ROAD	ROBUS	RUN	SPIN / SPINBUS	SPIDER / SPIDO	TEN	OTTO 24 Vdc	CLIMBER	SOON	X-BAR	SIGNO	WIL
WLT	•	•	•	•	•	•	•	•	•	•	•	•	•	•	•	•	•	•	•	•

Nice Kio

KIO

KA1

Kio, key-operated selector switch for low voltage contacts, with release mechanism for metal cord,

ideal for the automation of sectional doors, folding doors and rolling gates.

User-friendly:
Kio is both a key-operated selector switch and a release device. Its design makes it very convenient and effortless to use, and easy to install anywhere thanks to its very narrow outline.

Long-lasting: Kio is made of cast aluminium, epoxy powder coated for greater durability.

Easy: Led allows you to locate the selector switch even in total darkness.

More safety: coded key.
Release device activated directly by opening the door or by the winding device.
The very first product to incorporate the key-operated control and release motor functions.

Code	Description	Pc/Pack
KIO	Key-operated selector switch for low voltage contacts, with release mechanism for metal cord	1
KA1	6 m cable release kit for KIO	1

Nice Heating device

PW1

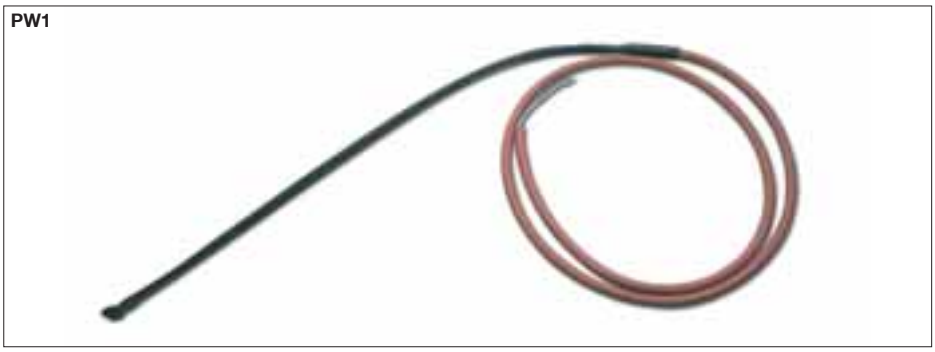

TW1

PW1, heating element:

it maintains a suitable temperature for the automation system to operate correctly, **even under the most severe of weather conditions.**

This is a particular type of **resistance** that can reach temperatures close to 100°C under normal environmental conditions.

Effective: each element has a consumption of 20 W and is extremely efficient thanks to the silicone sheath that covers the resistance and increases the diffusion of heat.

Indipendent: the device is directly fed by a 230/120 Vac power supply through the TW1 thermostat, and because it doesn't burden the transformer of the product itself, the performance characteristics of the gear motor remain the same.

TW1, regulation thermostat for PW1:

when the detected temperature drops below the set threshold, the thermostat activates the heating element PW1 thereby slowly increasing the internal temperature of the product itself; the heating action is maintained until the detected surrounding temperature stabilizes at the set levels.

Easy to program: the intervention threshold can be regulated between 0°C and -20°C.

Safe: equipped with a button so that an operational test can be performed at any time. The status of the outputs is continuously verified by means of Leds.

Code	Description	Pc/Pack
PW1	Heating element for the automation system	1
TW1	Regulation thermostat	1

Nice Programming unit

Code	Description	Pc/Pack
BUPC	Programming and code control unit for the FloR, VeryVR, Bio series	1
MOU	Programming and code control unit for MORX decoder	1

BUPC, the programming unit resolves “on-the-spot” control and maintenance problems of **Bio, FloR** and **VeryVR** radio control systems.

With this system you can add, cancel, check, enable or disable codes; copy the memory; enter learning and password security locks and print events.

The software, Windows compatible, is simple and immediate so you can use the BUPC palm-top as a local terminal.

From the PC you can also:

- enter personal notes for each code;
- make back-up copies of the memory in the shape of files on which you can work at any time;
- enter additional codes;
- print the memory’s contents;
- easy management of decoders and receivers with multiple memories;
- multiple insertion: enables the user to memorise large number of codes in just one step, simply by keying in the first and last codes.

MOU, the programming unit that allows you to manage all types of functions on the **MOM** proximity reader, **MOT** digital switch (through MORX decoder) and the **Flor-m** transponder transmitter with the utmost ease.

MOU can interface with your PC allowing you to create an orderly archive of all your installations:

- facility to display, add and delete codes one by one or delete all codes; in the memory plugged into the connector, making a backup copy on its internal buffer memory;
- manage the codes acquisition functions lock;
- manage a password for access to reserved data;
- edit, on the memory plugged into the connector, the parameter that controls the operating mode associated with decoder output 1 or 2, choosing between “Momentary”, “Timer”, “Bistable” or “Anti-theft”;
- change the time interval of the timer associated with output 1 or 2 when the memory is to be used in a decoder with the timer function active;
- program new memories starting in “Easy” or “Professional” mode;
- change the operations counter associated with a given card present in the memory;
- choose the output enable by the new combinations (1, 2 ot both);
- change the parameter relative to the card type that the decoder is able to recognise (MOCARD, MOCARDP, or both);
- change the code assigned to a given MOCARDP so that it can be programmed in line with specific requirements.

Technical specifications

	Power supply	Communication	Consumption (mA)	Dimensions (mm)
BUPC	9 V internal battery inside 12 Vdc external source	interface RS232 standard, 9600Bps N,8 1	10	210x100x25 h
MOU	9 V internal battery inside 12 Vdc external source	interface RS232 standard, 9600Bps N,8 1	10	210x100x25 h

Control units

4|11 The Nice World

12|65 Systems for swing gates

66|85 Systems for sliding gates

86|109 Barrier gate operator systems

110|137 Systems for garage and industrial doors

138|179 Control systems

180|205 Accessories

206|225 Control units

226|229 Product code alphabetical index

Control units with Solemyo and Opera system	210|213	Moonclever
Control units	214|217	Mindy A
Functions and connections	218|225	

Nice Selection guide

Follow the arrow and choose the right product

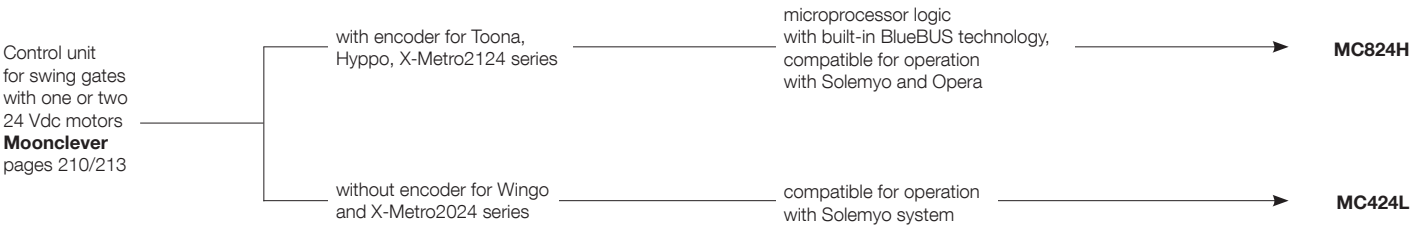

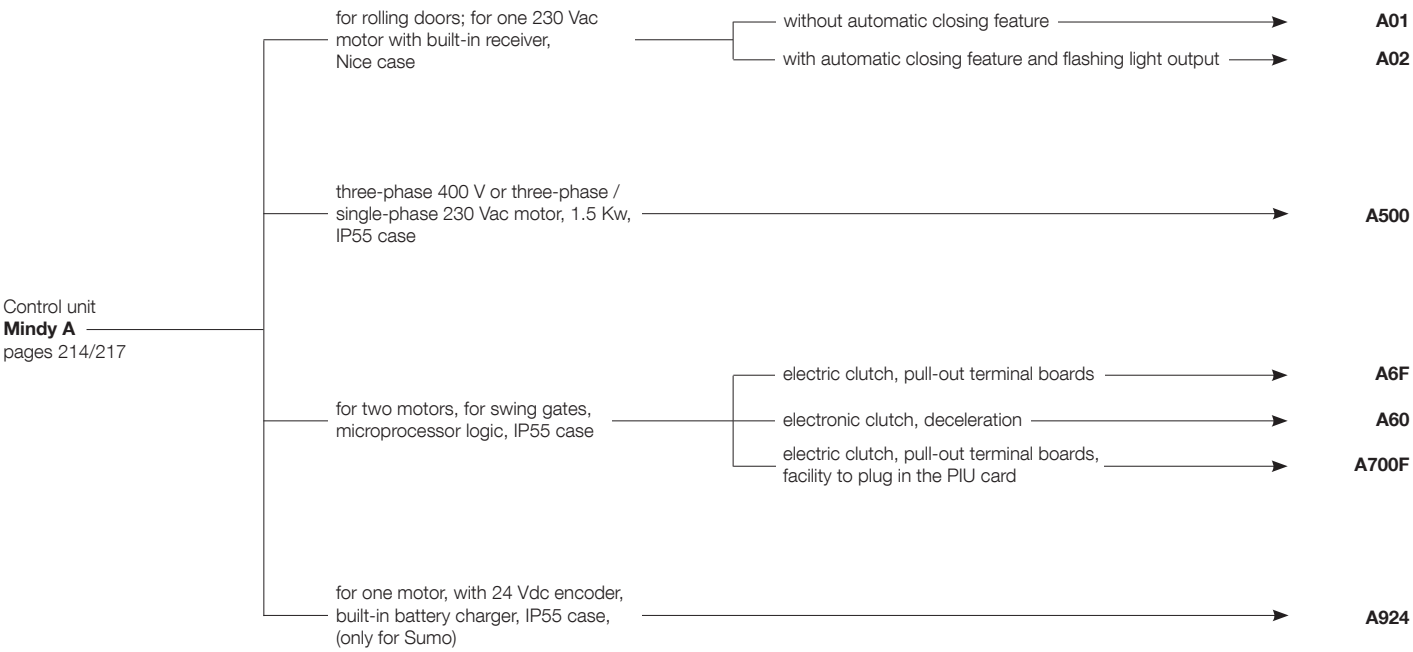

Moonclever

Mindy A

Control unit for 24 Vdc gear motors with magnetic encoder, for swing gates.
Equipped with Nice **BlueBUS** technology and compatible with the **Solemyo** solar power system and **Opera** system for management, programming and diagnostics of automations, also remotely.

Compatible with the Opera system, which thanks to the O-View multi-function display enables personalisation of the system, modifying the opening and closing positions, leaf offset and deceleration intervals, and diversifying parameters such as force, speed, and obstacle detection for each motor.

Microprocessor logic: in addition to the classic functions such as intelligent clutch with anti-crushing safety device, gradual start-up and deceleration, automatic memorisation of both travel limit positions and the pedestrian door function, Moonclever also offers the advantages of the Opera system.

Safe and reliable thanks to obstacle detection with dual technology and monitoring of motor absorption and speed via the encoder, throughout door/gate travel, with provision for connection of latest generation resistive sensitive edges.

Intelligent: on start-up, indicator to confirm correct power supply and efficient operation of the control unit; automatic fault diagnostics and signalling via the flashing light and confirmation leds.

Savings, respect for the environment, and autonomy: when connected to the buffer battery or Solemyo kit, consumption on standby is reduced to just 0.1 W.

Installation couldn't be simpler, thanks to the system BlueBUS, enabling connection of the control unit, motors and accessories by means of just two wires.

No black out: operation in the event of a power failure by means of optional batteries (PS124) with compartment in control unit.

Radio receiver: provision for insertion of SM snap-fit receivers.

Code	Description	Pc/Pack
MC824H	Control unit for one or two motors at 24 Vdc with encoder, with BlueBUS technology, compatible for Opera and Solemyo systems	1

Technical specifications

Code	**MC824H**
Power supply (Vac 50/60Hz)	230 ± 10%
Battery power (Vdc)	21 ÷ 28
Maximum motor power (VA; A)	360 (W); 15
Maximum accessories power 24 V (A)	0.2
Maximum flashing light power (V;W)	12; 21
Maximum gate open indicator power CA (V; W)	24; 2
Maximum electric lock power (Vac; VA)	12; 15
Working time "TL" (s)	-
Pause time "TP" (s)	1 ÷ 250
Opening delay time TRA (s)	Programmable
Closing delay time TRC (s)	Programmable
Courtesy light time "TCor" (s)	0:250
Pre-flashing time "TPre" (s)	0:10
Force adjustment (%)	-
Anti-crushing device (sensitivity)	Min ÷ Max
Case dimensions (mm)	230x125x300 h

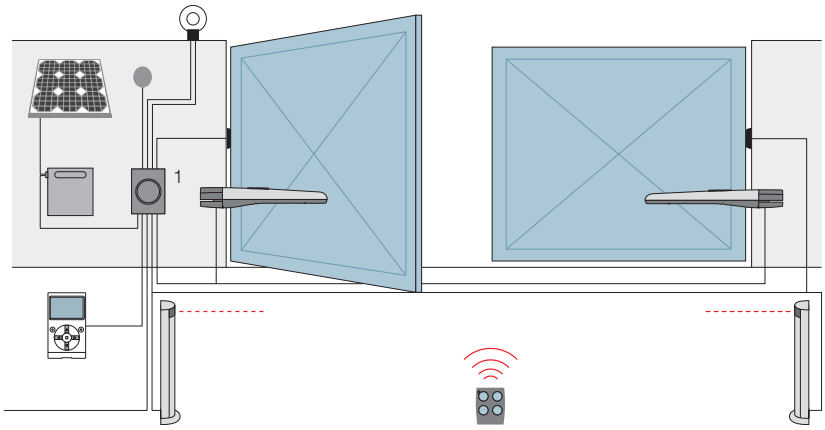

1. Moonclever

Accessories

MCA1
Spare control unit for MC824H.

Pc/pack 1

PS324
24 V battery with integrated battery charger.

Pc/pack 1

Solemyo system

The solar power kit Solemyo to automate gates, garage doors or barrier gates, including those located far from the power mains and without the need for costly and invasive excavation work.
See pages 186/187

Opera system

The innovative Opera system enables the installer to manage, program and control automation systems, also remotely, simply and safely, with significant savings in time.
See pages 140/141

Sole myo 24V

Control unit for 24 Vdc gear motors for swing gates, without encoder: Wingo4024, Wingo5024 and X-Metro2020.

Compatible with the solar power kit **Solemyo.**

Safe and reliable thanks to obstacle detection throughout travel and provision for the connection of latest generation resistive sensitive edges.

Intelligent: automatic fault diagnostics and signals via flashing light and confirmation leds.

Savings, respect for the environment, ad autonomy: connected to the buffer battery or Solemyo kit, consumption on standby is just 0.1 W.

No black out: operation in the event of a power failure by means of optional batteries (PS124) with compartment in control unit.

Radio receiver: provision for insertion of SM snap-fit receivers.

Code	Description	Pc/Pack
MC424L	Control unit for one or two motors at 24 Vdc without encoder, compatible for Solemyo system	1

Technical specifications

Code	**MC424L**
Power supply (Vac 50/60Hz)	230 ± 10%
Battery power (Vdc)	21 ÷ 28
Maximum motor power (VA; A)	75; 3
Maximum accessories power 24 V (A)	0.2 +0.1
Maximum flashing light power (V;W)	24; 25
Maximum gate open indicator power CA (V; W)	24; 2
Maximum electric lock power (Vac; VA)	12; 15
Working time “TL” (s)	-
Pause time “TP” (s)	5 ÷ 80
Opening delay time TRA (s)	5 ÷ 40% TL
Closing delay time TRC (s)	-
Courtesy light time “TCor” (s)	-
Pre-flashing time “TPre” (s)	3
Force adjustment (%)	-
Anti-crushing device (sensitivity)	1 ÷ 6
Case dimensions (mm)	230x125x300 h

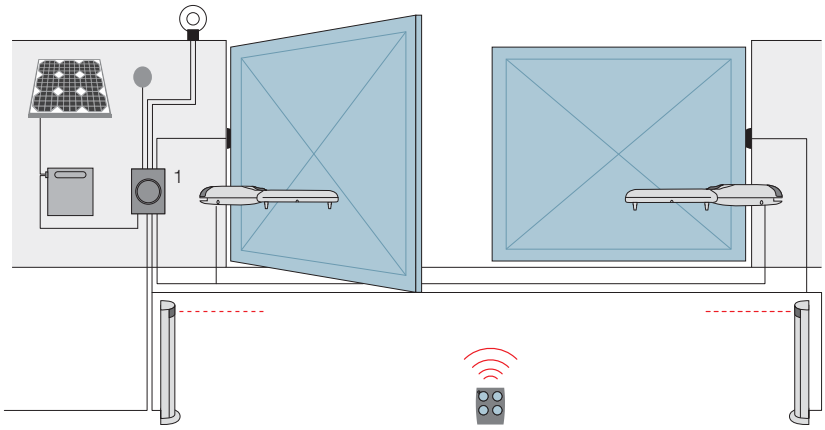

1. Moonclever

Accessories

MCA2
Spare control unit for MC424L.

Pc/pack 1

PS124
24 V battery with integrated battery charger.

Pc/pack 1

Solemyo system

The solar power kit Solemyo to automate gates, garage doors or barrier gates, including those located far from the power mains and without the need for costly and invasive excavation work.
See pages 186/187

Nice Mindy A

A01
A02

Mindy A01, A02 control units for rolling doors.

Incorporated radio card compatible with the Nice Flo, FloR and Smilo systems.

Programmable Step-by-step/Open input.

Input for **close** function.

Input for connection interface for 8.2 KOhm resistive sensitive edge.

Semi-automatic and automatic operation.

Flashing light output (A02 model).

Code	Description	Pc/Pack
A01	For one 230 Vac motor, for rolling shutters, without automatic closing feature, with built-in receiver compatible with the Flo, FloR and Smilo series of transmitters	1
A02	For one 230 Vac motor, for rolling shutters, with semi-automatic and automatic closing feature, flashing light output and with built-in receiver compatible with the Flo, FloR and Smilo series of transmitters	1

Technical specifications

Code	A01	A02
Power supply (Vac 50/60 Hz)	230 ± 10%	
Battery power (Vdc)	-	
Maximum motor power (VA; A)	600; 3	
Maximum accessories power 24 V (A)	0.055	
Maximum flashing light power (V;W)	-	230; 40
Maximum gate open indicator power CA (V; W)	-	
Maximum electric lock power (V; W)	-	
Working time “TL” (s)	5 ÷ 120	
Pause time “TP” (s)	-	1 ÷ 120
Opening delay time TRA (s)	-	
Closing delay time TRC (s)	-	
Courtesy light time “TCor” (s)	-	
Pre-flashing time “TPre” (s)	-	
Force adjustment (%)	-	
Anti-crushing device (sensitivity)	-	
Case dimensions (mm)	128x112x43 h	

A500

PUL

Mindy A500 control unit, three-phase 230 V, 400 V or single-phase 230 Vac motor, 1.5 Kw.

Automatic detection of obstacles, door block, brake.

Pull-out terminal boards.

Code	Description	Pc/Pack
A500	For a three-phase 400 Vac or single-phase / three phase 230 Vac motor, 1.5 Kw	1
PIU	Expansion card for additional functions	1
PUL	Central cover with incorporated control buttons, complete with connecting cable and connector for A500 and A924	1

Technical specifications

Code	**A500**
Power supply (Vac 50/60 Hz)	400/230 ± 10%
Battery power (Vdc)	-
Maximum motor power (VA; A)	1500; 4
Maximum accessories power 24 V (A)	0.2 + 0.2
Maximum flashing light power (V;W)	230; 40
Maximum gate open indicator power CA (V; W)	24.2
Maximum electric lock power (V; W)	-
Working time “TL” (s)	3 ÷ 120 (210)
Pause time “TP” (s)	5 ÷ 200
Opening delay time TRA (s)	-
Closing delay time TRC (s)	-
Courtesy light time “TCor” (s)	(PIU)
Pre-flashing time “TPre” (s)	5
Force adjustment (%)	-
Anti-crushing device (sensitivity)	Min ÷ Max
Case dimensions (mm)	220x110x280 h

Nice Mindy A

A6F
A60
A700F

PUL

Mindy A6F, A60 control units, for two motors; microprocessor logic.

Pull-out terminal boards (A6F and A60 models).

Two photocell inputs with separate functions.

Electrical (A6F model) or electronic (A6F and A60 models) adjustment.

Gradual departure and slowdown (A60).

Adjustment is separate to the work times (A60).

Mindy A700F control unit, for two motors; microprocessor logic.

Removable terminal boards; two photocell inputs; four limit switch inputs; partial opening (standard).

Unbeatable performance due to the many programmable functions.

PIU expansion card can be inserted to provide more functions.

Code	Description	Pc/Pack
A6F	For two 230 Vac motors with electric clutch, IP55 case	1
A60	For two 230 Vac motors with electronic clutch and slowdown, IP55 casing	1
A700F	For two 230 Vac motors with electric clutch. Possibility of adding the PIU expansion card, IP55 case	1
PIU	Expansion card for additional functions	1
PUL	Central cover with incorporated control buttons, complete with connecting cable and connector for A500 and A924	1

Technical specifications

Code	A6F	A60	A700F
Power supply (Vac 50/60 Hz)	230 ± 10%		
Battery power (Vdc)	-		
Maximum motor power (VA; A)	2x400; 2		
Maximum accessories power 24 V (A)	0.3	0.2 + 0.075	0.2 + 0.1
Maximum flashing light power (V;W)	230; 100	230; 40	230; 100
Maximum gate open indicator power CA (V; W)	24; 2		
Maximum electric lock power (V; W)	12; 25		
Working time “TL” (s)	2.5 ÷ 40 (80)		
Pause time “TP” (s)	5 ÷ 80		
Opening delay time TRA (s)	0/2.5 ÷ 12		
Closing delay time TRC (s)	0/2.5 ÷ 12		
Courtesy light time “TCor” (s)	60		60 (PIU)
Pre-flashing time “TPre” (s)	5		
Force adjustment (%)	30/45/60/80/100	0 ÷ 100	30/45/60/80/100
Anti-crushing device (sensitivity)	-		
Case dimensions (mm)	220x110x280 h		

A924

PUL

Mindy A924 control units (only for Sumo)

24 V version for one dc motor, complete with encoder.

Intelligent clutch with anti-crush safety feature.

Automatic memorization of limit switches on opening and closing; gradual departure and slowdown.

Pedestrian passage function “service”.

Warning light for maintenance (can be programmed).

Built-in battery charger.

Pull-out terminal boards.

Code	Description	Pc/Pack
A924	For one motor, with 24 Vdc encoder, built-in battery charger, IP55 case (only for Sumo)	1
B12-B	12 V, 6 Ah batteries	1
B12V-C	12 V, 2 Ah batteries	1
CARICA	Plug-in card for battery charger	1
BA3-A	Nice battery box for A924	1
PUL	Central cover with incorporated control buttons, complete with connecting cable and connector for A500 and A924	1

Technical specifications

Code	**A924**
Power supply (Vac 50/60 Hz)	230 ± 10%
Battery power (Vdc)	21 ÷ 28
Maximum motor power (VA; A)	360 (W); 15
Maximum accessories power 24 V (A)	0.2 + 0.2
Maximum flashing light power (V;W)	24/25
Maximum gate open indicator power CA (V; W)	24; 2
Maximum electric lock power (V; W)	24; 12
Working time “TL” (s)	-
Pause time “TP” (s)	1 ÷ 1023
Opening delay time TRA (s)	-
Closing delay time TRC (s)	-
Courtesy light time “TCor” (s)	60
Pre-flashing time “TPre” (s)	5
Force adjustment (%)	-
Anti-crushing device (sensitivity)	Min ÷ Max
Case dimensions (mm)	220x110x280 h

Nice Moonclever and Mindy: functions

Programmable functions	A0/A0R	A01	A02	A1/1B	A100F	A3/A3F	A400	A500	A6/A6F	A60	A700F	A824	A924	MC824H/HK7024	MC424L	WALKY	PP7024	PP7124/HO2124	ROAD	RO300	ROBUS 350	ROBUS 600/1000/NAKED	RUN	RO1124	RO1000	RO1010	TH1551/2251	SP6000	SP6065/6100	SPIN10	SPIN20/21/22KCE	SPIN23	SPIN30/SN6031	SPIN40/SN6041	OT21FC	OT2124/TN2030/TNKCE	OT31	CR2124	SOON/TN2010	M-BAR/ L-BAR	X-BAR/S-BAR	SIGNO3i/4/4i/6/6i	WIL4/4i/6/6i
Manual operation					•			•	•	•	•	•	•	•				•		•	•	•	•	•	•	•		•			•	•	•	•			•	•	•	•	•	•
Semi-automatic operation	•	•	•	•	•	•	•	•	•	•	•	•	•	•	•	•	•	•	•	•	•	•	•	•	•	•	•	•	•	•	•	•	•	•	•	•	•	•	•	•	•	•
Automatic operation			•	•	•	•	•	•	•	•	•	•	•	•	•	•	•	•	•	•	•	•	•	•	•	•	•	•	•	•	•	•	•	•	•	•	•	•	•	•	•	•
Automatic operation + always close					•			•	•	•	•	•	•	•		•		•		•	•	•	•	•	•	•					•	•	•	•			•	•	•	•	•	•
Condominium operation			•	•	•	•	•	•	•	•	•	•	•	•	•	•	•	•	•	•	•	•	•	•	•	•			•	•	•	•	•	•	•	•	•	•	•	•	•	•
Pre-flashing					•	•	•	•	•	•	•	•	•	•		•	•		•	•	•	•	•	•	•						•	•	•	•			•	•	•	•	•	•
Close again 5 s after Photo					•		•	•	•	•	•	•	•	•	•	•	•		•	•	•	•	•	•	•					•	•	•	•			•	•	•	•	•	•
Photo during opening, too				•	•	•		•	•	•	•	•								•	•	•	•	•	•						•	•	•	•			•	•	•	•	•	•
Gradual departure					•				•		•	•	•	•	•	•	•	•	•	•	•			•	•	•	•	•	•	•	•	•	•	•	•		•	•	•	•	•	•
Gradual stop					•				•		•	•	•	•	•	•	•	•			•			•				•	•	•	•	•	•	•		•		•	•	•	•	•	•
Flashing even during the Pause											•													•														•						•
Courtesy light “on” Flashing light	•			•		•			•		•	•										•	•									•	•	•			•		•	•	•		
Impulsive courtesy light										•										•																							
Gate open light (CA) with proportional flashing											•				•	•	•					•	•	•		•	•	•				•	•	•	•				•	•	•		
Cancel stop during the Step-by Step cycle				•		•		•			•			•		•		•				•	•	•								•	•	•					•	•	•		
Photocell safety when each movement starts						•	•	•	•		•			•		•		•	•			•	•	•	•	•	•			•	•	•	•	•	•	•		•	•	•		
Automatic realignment when power supply returns																								•														•						
Positioning function					•					•		•	•	•	•	•	•	•	•	•	•	•	•	•	•	•	•	•	•	•	•	•	•	•	•	•		•	•	•	•	•	•
Hammering						•			•	•	•	•		5																														
Maintaining the pressure on oil-pressure motors										•	•																																	
Activation of the Phototest					•		•	•		•	•	•	•		•		•		•	•					P	P	P	•		•					P	•							•	
Skip STOP during opening				•		•		•			•			•		•		•				•	•	•								•	•	•					•	•	•		
Skip STOP during closing				•		•		•			•			•		•		•	•			•	•	•							•	•	•	•		•			•	•	•		
CLOSE becomes PEDESTRIAN OPEN										•	•	•		•								•	•																				
Photocells (PHOTO and/or PHOTO1) during opening too					•	•			•	•	•	•		•	•	•	•	•		•		•	•	•	•	•	•					•	•	•	•			•	•	•	•		•
Partial remote controlled inversion with PHOTO photocell	•																					•	•									•	•	•					•	•	•		
Complete remote controlled inversion with PHOTO photocell	•	•	•	•	•	•	•	•	•	•	•	•	•	•	•	•	•	•	•	•	•	•	•	•	•	•	•	•	•	•	•	•	•	•	•	•	•	•	•	•	•	•
Exclude limit switch	•																																										
Standard Step-by-Step function: Open-Close-Open				•		•								•		•		•				•	•	•								•	•	•					•	•	•		
Mode 2 Step-by-Step function: Open-Pause-Close-Open						•													•			•	•								•	•	•	•		•			•	•	•		
Mode 3 Step-by-Step function: Open-Stop-Close-Open						•								•		•		•	•			•	•								•	•	•	•		•			•	•	•		
Temporary pause (photocell)				•		•				•												•	•										•	•	•					•	•	•		
Gate open light (CA) becomes “one way” traffic lights													•																														•	•
Two way traffic lights													•																				•	•	•					•	•	•	•	•
Step-by-Step function Open-Stop-Close-Stop	•	•	•		•		•	•	•	•	•	•	•	•	•	•	•	•	•	•	•	•	•	•	•	•	•	•	•	•	•	•	•	•	•	•	•	•	•	•	•	•
Extension of work time				•	•	•		•	•	•	•									•				•	•	•									•								
Pause time with presence detector					•	•	•	•	•	•	•	•	•	•	•	•	•	•	•	•	•	•	•	•	•	•	•	•	•	•	•	•	•	•	•	•	•	•	•	•	•	•	•	•
1st motor delay during opening						•	•			•				•	•		•	•																										
Gate Open light with limit switch						•																																						
Brake					•			•				•	•							•	•	•	•	•	•	•	•		•						•			•				•	•
Radio card incorporated in the control unit		•	•																•									•	•						•								
Stand-by														•	•	•	•	•			•	•										•	•	•					•	•	•		

Outputs/Inputs	TT2N	TT2L	TT2D	TT1N	TT1L	A0	A0R	A01	A02	A1/1B	A100F	A3	A3F	A400	A500	A6	A6F	A60	A700F	A824	A924	MC824H/HK7024	MC424L	WALKY	PP7024	PP7124/HO2124	ROAD
Motor 1 output	•			•		•	•	•	•	•	•	•	•	•	•	•	•	•	•	•	•	•	•	•	•	•	•
Motor 2 output											*1	•	•	•		•	•	•	•	•		•	•	•	•		
Flashing Light output						•	•		•	•	•	•	•	•	•	•	•	•	•	•	•	•	•	•	•	4/5	•
24 V motor power supply																				•	•	•	•	•	•	•	•
230 Vac motor power supply	•	•	•	•	•	•	•	•	•	•	•	•	•	•	•	•	•	•	•								
400 Vac motor power supply															•												
Electric lock output												•	•				•	•	•	•	•	4/5	•	•	•	4/5	
Suction output																			P	R	•	*3		*3		*5	
Phototest output											•			•	•			•	•	•	•		*4		*4		•
Gate open output light										•	•	•	•	•	•	•	•	•	•	•	•	4/5	•	*3	•	4/5	
Step-by-step input						•	•	*4	*4	•	•	•	•	•	•	•	•	•	•	•	•	•	•	•	•	4/5	•
Open input								*4	*4		•	•	•	B	•			•	•	•	•	•	B	*5	B	4/5	
Input for close function								•			•	•	•	B	•			•	•	•	•	4/5	B	*5	B	4/5	
Partial Open Input												A	A	B	P				•P	•R	•	4/5	B	*5	B	4/5	
Stop Input								*4	•	•	•	•	•	•	•	•	•	•	•	•	•	•	*4	•	*4	•	•
Optical sensor input																											
Resistive edge input								•	•		•											•	*4	•	*4	•	•
BlueBUS Input																						•		•		•	
PHOTO photocell input						•	•	*4	•	•	•	•	•	•	•	•	•	•	•	•	•	*5	•	*5	•	*5	•
PHOTO 1 photocell during closing input														•		•	•	•	•	•		*5	•	*5	•	*5	
PHOTO 2 photocell during opening input														B	P				P	R	•	*5	B	*5	B	*5	
Limit switch input during opening (for 1 motor) FCA 1						•	•			•	•	•	•		•				•			•					•
Limit switch input during closing (for 1 motor) FCC 1						•	•			•	•	•	•		•				•			•					•
Limit switch input during opening (for 2 motors) FCA 2																			•			•					
Limit switch input during closing (for 2 motors) FCC 2																			•P			•					
Courtesy light output											•				P			•		R	•	4/5		*3		4/5	
Maintenance indicator light																					•	4/5		*3		*5	
Single-phase load		•	•		•																						
Traffic lights																			P	R		*5				*5	
Loop detector																											
Adjustments																											
Work time							•	•	•	•	•	•	•		•	•	•	•	•								
Pause time	•	•	•	•	•	•			•	•	•	•	•	•	•	•	•	•	•	•	•	•	•	•	•	•	•
Opening delay time														•		•	•	•	•	*2		*2	•		•	•	
Closing delay time													•	•		•	•	•	•	*2		*2	•		•	•	
Electronic adjustment force							F			F		F				•		•									•
Positioning force																			•								
Electromechanical adjustment force											•		•				•		•								
Mechanical adjustment force																											
Current sensitivity														•	•					•	•	•	•	•	•	•	•
Speed																					•	•	•	•	•	•	•
Optional accessories																											
RADIO card with Nice plug-in										•		•	•		•	•	•		•	•	•						
RADIO card with SM plug-in						•	•				•			•				•				•	•	•	•	•	
Slot card for battery recharger																				•			•		•		
PER expansion card																				•							
PIU expansion card															•				•								
AR electronic adjustment card										•		•															
Pedestrian leaf							•					•	•														
Man present												•	•		•												
Partial inversion												•	•		•												
Designed to accommodate buffer batteries																						•		•		•	

Outputs/Inputs	RO300	ROBUS 350	ROBUS 600/1000/NAKED	RUN	RO1124	RO1000	TH1551	TH2251	SP6000	SP6065/6100	SPIN10	SPIN20/21/22KCE	SPIN23	SPIN30/SN6031	SPIN40/SN6041	OT21FC	OT2124	TN2030/TNKCE	OT31	CR2124	SOON	TN2010	M-BAR/ L-BAR	X-BAR/S-BAR	SIGNO3/3I/4/4I/6/6I	WIL4/4I/6/6I
Motor 1 output	•	•	•	•	•	•	•	•	•	•	•	•	•	•	•	•	•	•	•	•	•	•	•	•	•	•
Motor 2 output																*1		•				•				
Flashing Light output	•	•	•	•	•	•	•	•	•	•	•	•	•	•	•	•	•	•	•	•	•	•	•	•	•	•
24 V motor power supply		•	•		•				•	•	•	•	•	•	•		•	•		•	•	•	•	•	•	•
230 Vac motor power supply	•			•		•	•	•								•			•							
400 Vac motor power supply																										
Electric lock output			*3	*3		P	P	P				•	*3	*3	*3	P	•	•			*3	*3	*3	*3	•	
Suction output			*3	*3								•	*3	*3	*3						*3	*3	*3	*3	•	
Phototest output	•					P	P	P	•		•					P	•	•							•	
Gate open output light		•	•	•	•	•	•	•				•	*3	*3	*3					•	•	•	*3	*3	•	•
Step-by-step input	•	•	•	•	•	•	•	•	•	•	•	•	•	•	•	•	•	•	•	•	•	•	•	•	•	•
Open input			•	•	•	•	•	•					•	•	•	•				•	•	•	•	•	•	•
Input for close function			•	•	•	•	•	•					*5	*5	*5	•				•	•	•	•	•	•	•
Partial Open Input			*5	*5	•	P	P	P					*5	*5	*5	P				•	*5	*5	*5	*5		
Stop Input	•	•	•	•	•	•	•	•	•	•	•	•	•	•	•	•	•	•	•	•	•	•	•	•	•	•
Optical sensor input													•		•						•	•	•	•		
Resistive edge input		•	•	•							•	•	•	•	•		•	•			•	•	•	•	•	
BlueBUS Input		•	•	•								•	•	•	•						•	•	•	•		
PHOTO photocell input	•	•	*5	*5	•	•	•	•	•	•	•		*5	*5	*5	•	•	•	•	•	*5	*5	*5	*5	•	•
PHOTO 1 photocell during closing input		•	*5	*5																			*5			
PHOTO 2 photocell during opening input		•	*5	*5	•	P	P	P								P				•			*5			•
Limit switch input during opening (for 1 motor) FCA 1	•		•	•		•	•	•	•	•						•	•	•	•				•		•	•
Limit switch input during closing (for 1 motor) FCC 1	•		•	•		•	•	•	•	•						•	•	•	•				•		•	•
Limit switch input during opening (for 2 motors) FCA 2																										
Limit switch input during closing (for 2 motors) FCC 2																										
Courtesy light output			*3	*3		P	P	P		•		•	*3	*3	*3	•	•	•			*3	*3	*3	*3	•	•
Maintenance indicator light			*3	*3									*3	*3	*3						*3	*3	*3	*3	•	
Single-phase load																										
Traffic lights						P	P	P					*3	*3	*3	P					*3	*3	•	*3	•	•
Loop detector																							•			
Adjustments																										
Work time	•					•	•	•								•			•							
Pause time	•	•	•	•	•	•	•	•	•	•	•	•	•	•	•	•	•	•	•	•	•	•	•	•	•	•
Opening delay time																										
Closing delay time																										
Electronic adjustment force	•		•	•		•	•				•	•	•	•	•		•	•			•	•	•	•		•
Positioning force																										•
Electromechanical adjustment force																•			•							
Mechanical adjustment force							•	•																		
Current sensitivity		•	•	•	•				•	•	•	•	•	•	•		•	•		•	•	•	•	•	•	•
Speed		•	•							•	•	•	•	•	•		•	•			•	•	•	•	•	•
Optional accessories																										
RADIO card with Nice plug-in					•	•	•	•		•						•			•	•						
RADIO card with SM plug-in	•	•	•	•					•			•	•	•	•						•	•	•	•	•	•
Slot card for battery recharger		•			•							•		•	•					•					•	•
PER expansion card																										
PIU expansion card						•	•	•								•										
AR electronic adjustment card																										
Pedestrian leaf																										
Man present																										
Partial inversion																										
Designed to accommodate buffer batteries		•	•										•	•	•						•	•	•	•	•	

F = with the AR accessory connected.
R = with the PER accessory connected.
A = with the AP accessory connected.

P = with the PIU accessory connected.
B = only an input can be programmed.

*1 = addition of the 2nd motor authorised.
*2 = not referred to a unit of time but to a distance.
*3 = programmable output.
*4 = just one programmable input/ output.
*5 = programmable with O-View.

Nice Connections

WALKY

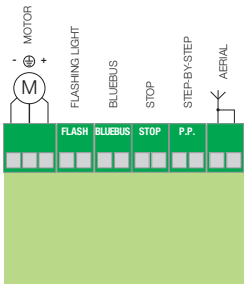

POP

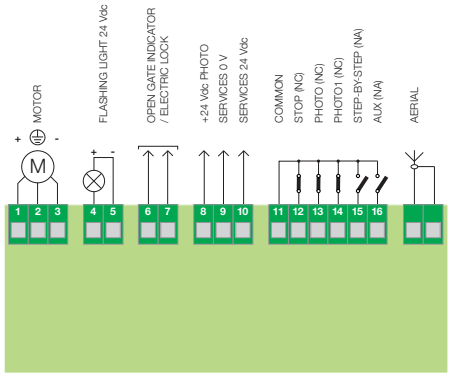

POP 7124

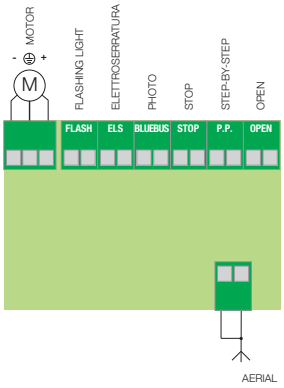

HOPP 7124

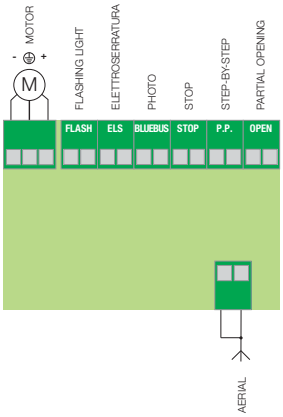

ROBUS 350

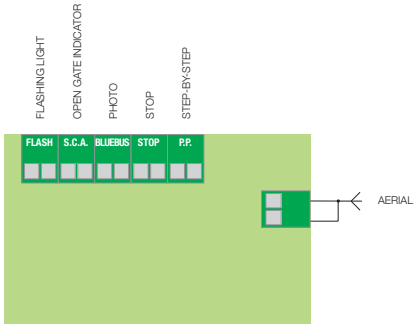

ROBUS 400/600/1000

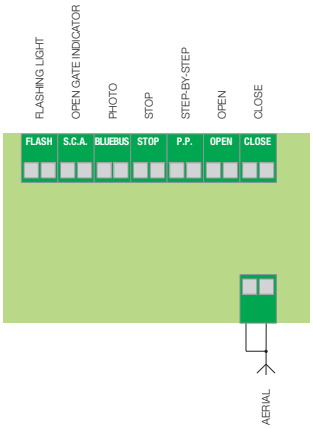

RO1000/RO1010

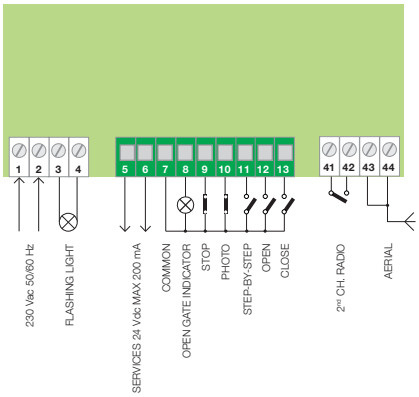

RO1124

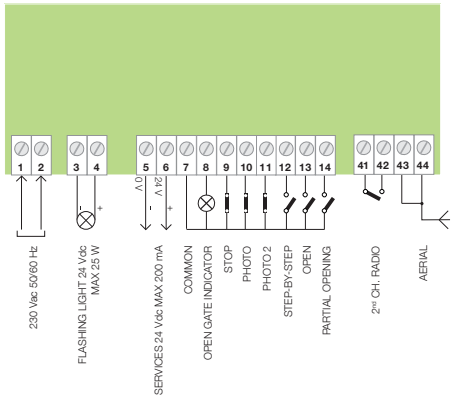

ROAD

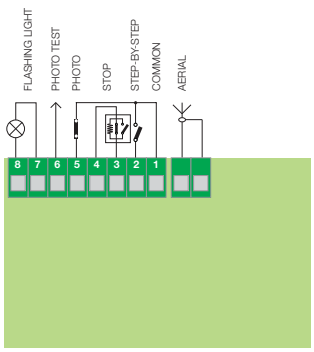

RO300

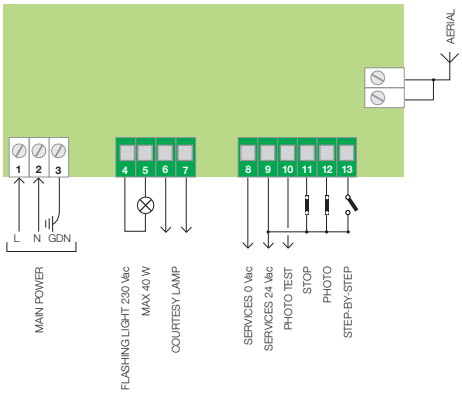

RUN

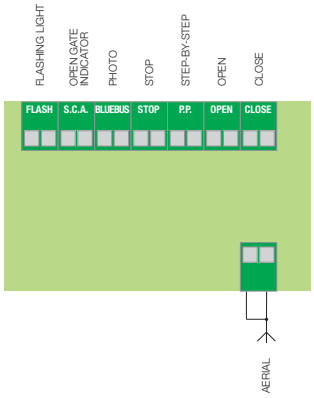

NAKED

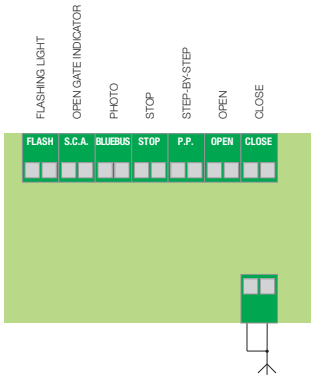

TH1551/TH2251

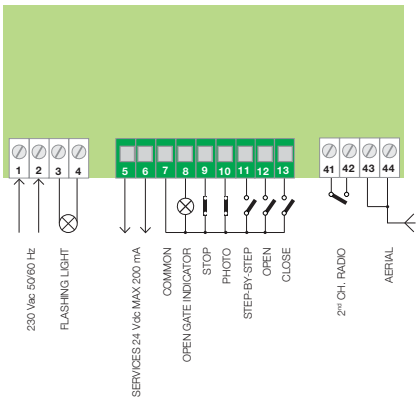

L-BAR/M-BAR

S-BAR

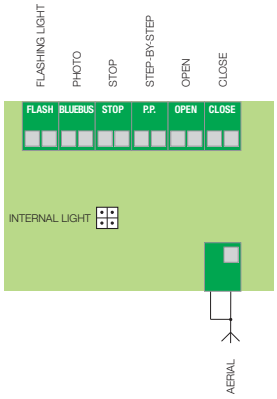

X-BAR

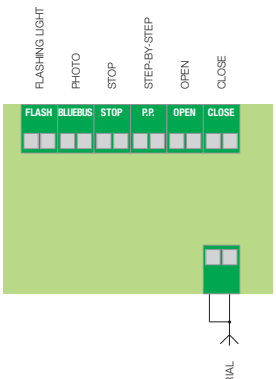

SIGNO

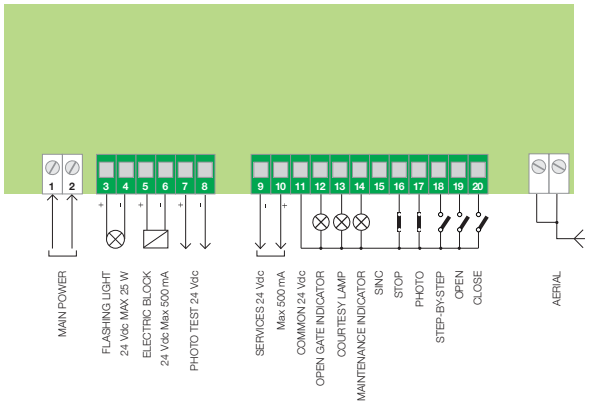

WIL

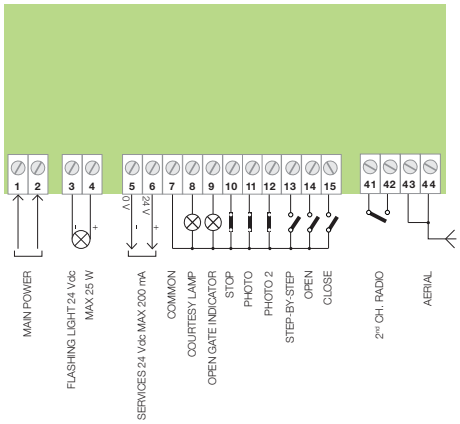

Nice Connections

SPIN20KCE/SPIN21KCE/SPIN22KCE

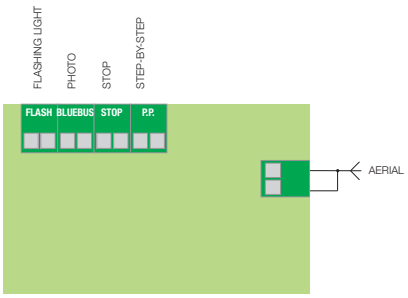

SPIN23KCE/SPIN30/SN6031/SPIN40/SN6041

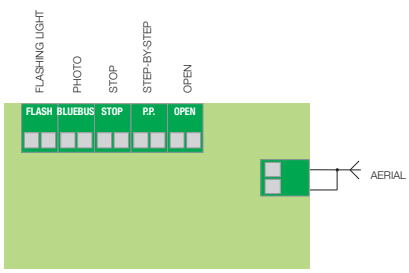

SPIN10KCE/SPIN11KCE

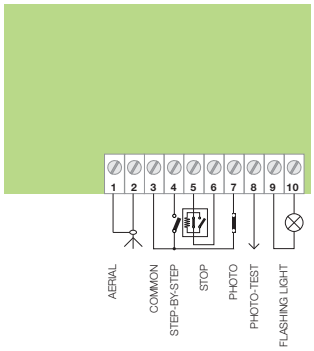

SPIDER/SPIDOKCE

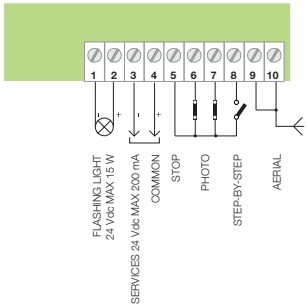

TN2010

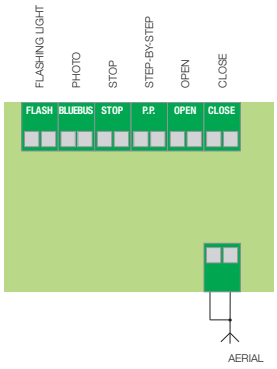

TN2030/TNKCE

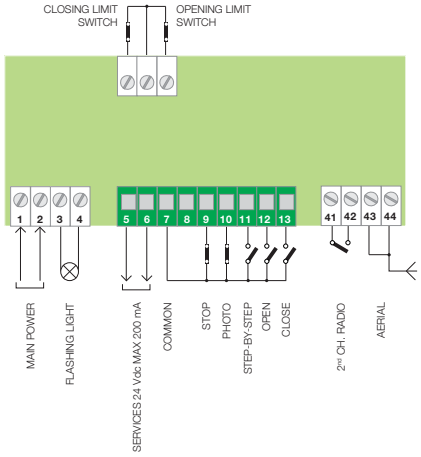

OTTO

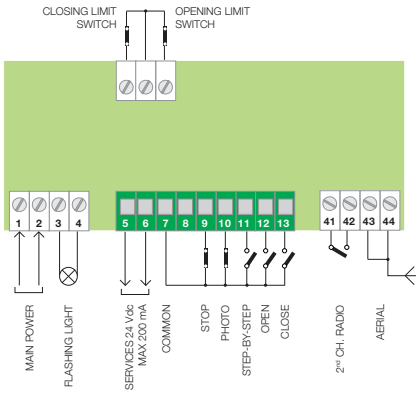

OTTO 24

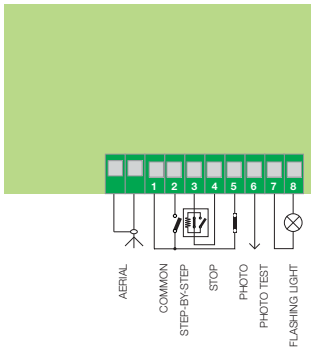

SOON

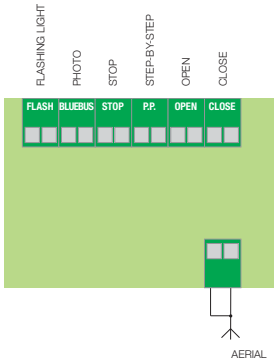

TTX4

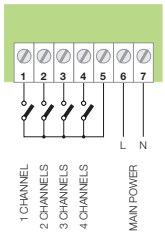

TT2N

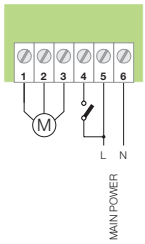

TT2L

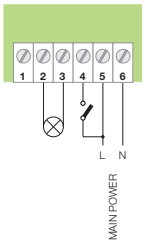

TT2D

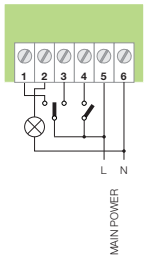

TT1N

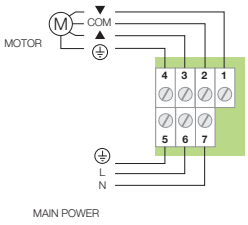

TT1L

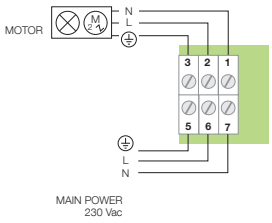

MC824H/HYKE

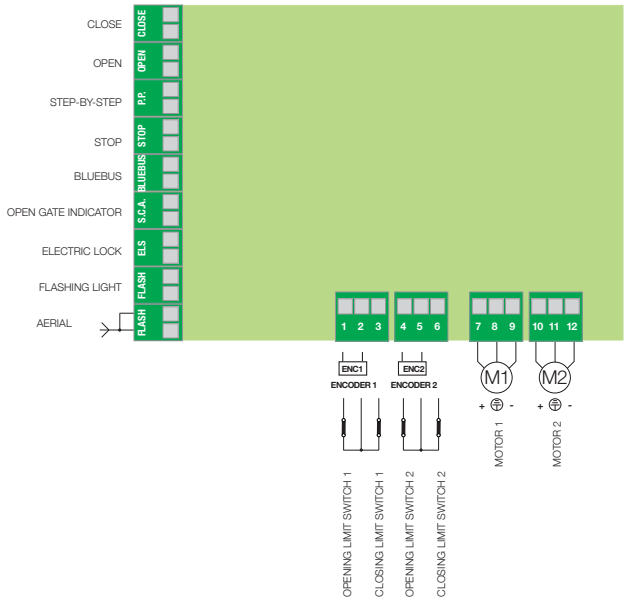

MC424L

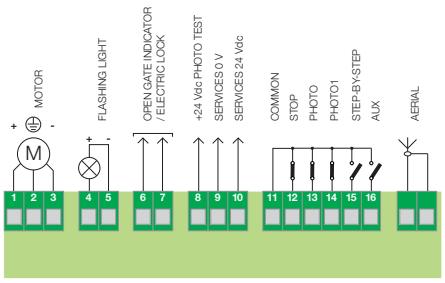

A0

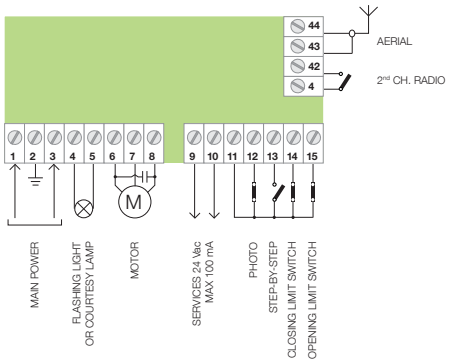

A01

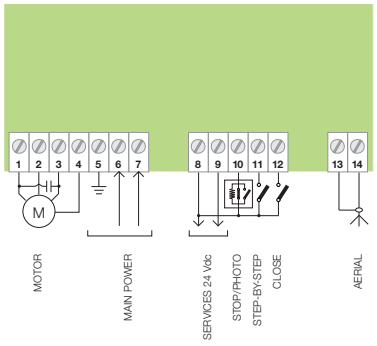

Nice Connections

A02

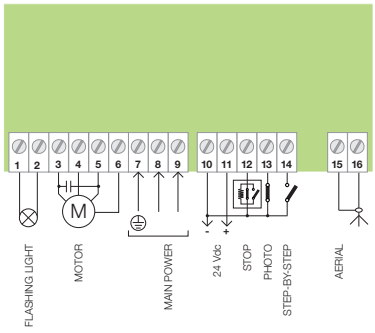

A1

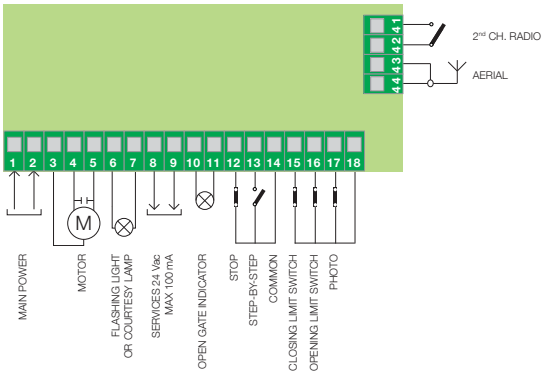

A3/A3F

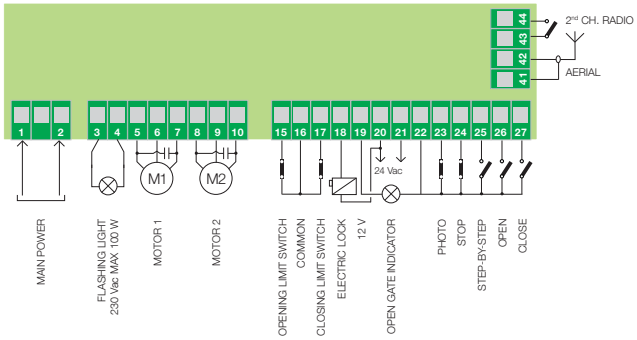

A100F

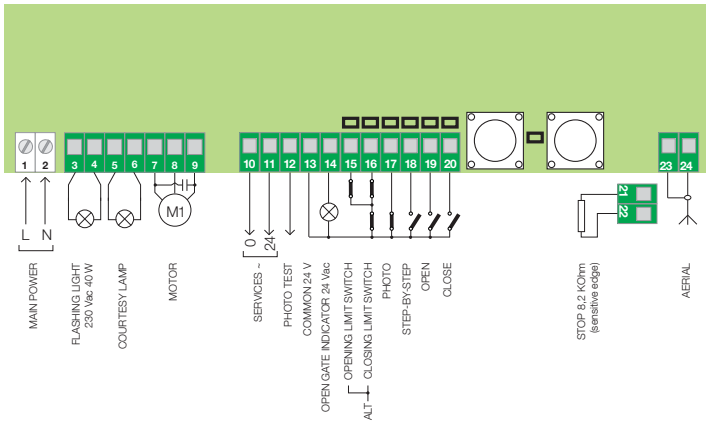

A400

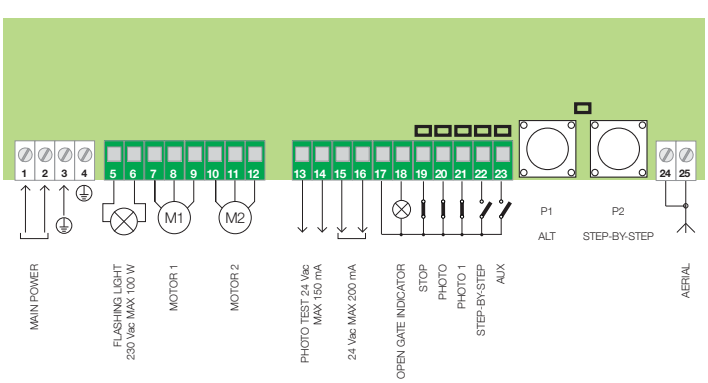

A500

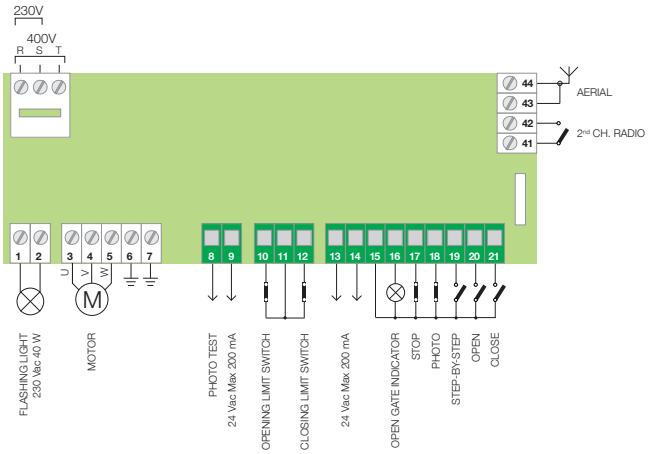

A60

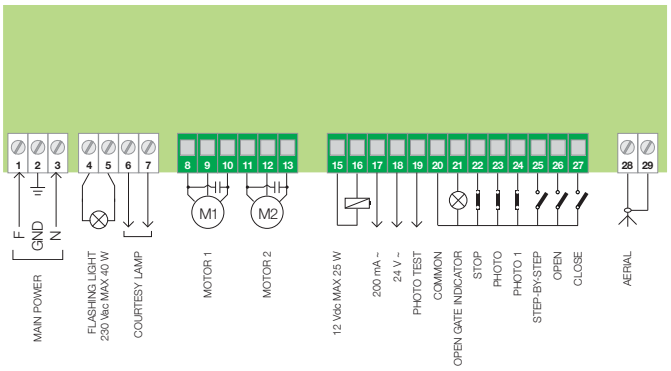

A6/A6F, A700F

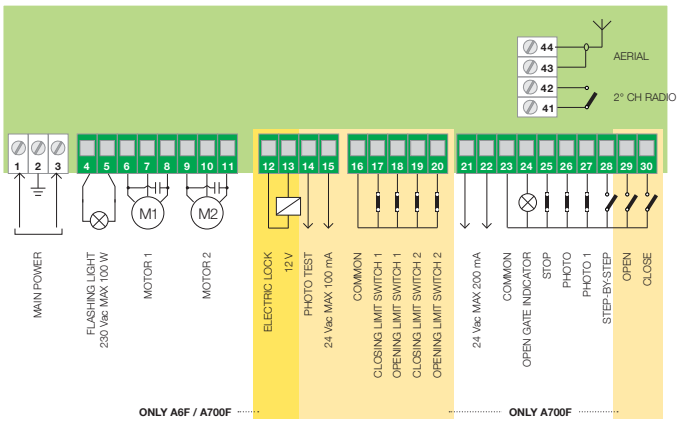

A824

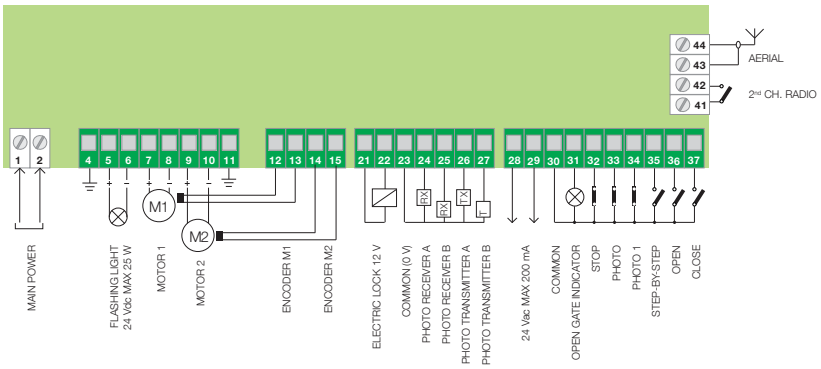

A924

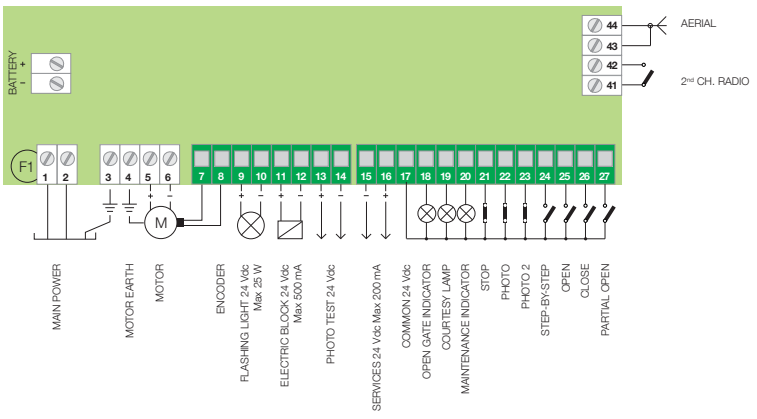

Nice Alphabetical index

Nice product codes

Code	Product line	Page
A01	Mindy - Control unit	**214**
A02	Mindy - Control unit	**214**
A6F	Mindy - Control unit	**216**
A60	Mindy - Control unit	**216**
A500	Mindy - Control unit	**215**
A700F	Mindy - Control unit	**216**
A924	Mindy - Control unit	**217**
ABF	Electronic accessory	**175**
ABFKIT	Electronic accessory	**175**
ALA1	Electronic accessory	**153**
B3V	Electronic accessory	**175**
B3VB	Electronic accessory	**175**
B12-B	Electronic accessory	**109**
B12V-A	Electronic accessory	**175**
B12V-C	Electronic accessory	**217**
BA3-A	Electronic accessory	**133**
BM250	Electronic accessory	**175**
BM1000	Electronic accessory	**197**
BM5024	Big-Metro - Motor for swing gates	**64**
BMA1	Mechanical accessory	**65**
BMBOX	Big-Metro - Foundation box	**64**
BMBOXI	Big-Metro - Foundation box	**64**
BUPC	Programming and code control unit	**64**
CABLA01	Electronic accessory	**153**
CABLA02	Electronic accessory	**153**
CABLA03	Electronic accessory	**153**
CABLA04	Electronic accessory	**153**
CABLA05	Electronic accessory	**153**
CABLA06	Electronic accessory	**153**
CABLA07	Electronic accessory	**153**
CARICA	Electronic accessory	**109**
CB	Mechanical sensitive edge	**189**
CHEU	Neutral key	**200**
CHS	Neutral key	**200**
CM-B	Mechanical accessory	**29**
CMA 1,5MT	Mechanical sensitive edge	**189**
CMA 1,7MT	Mechanical sensitive edge	**189**
CMA 2MT	Mechanical sensitive edge	**189**
CMA 2,5MT	Mechanical sensitive edge	**189**
CMBK4	Mechanical sensitive edge	**189**
CMBK6	Mechanical sensitive edge	**189**
CRA1	Mechanical accessory	**133**
CRA2	Mechanical accessory	**133**
CRA3	Mechanical accessory	**133**
CRA4	Mechanical accessory	**133**
CRA5	Mechanical accessory	**133**
CRA6	Mechanical accessory	**133**
CRA7	Mechanical accessory	**133**
CRA8	Mechanical accessory	**131**
CRA9	Mechanical accessory	**133**
DBM5	Resistive sensitive edge	**188**
DBM7,5	Resistive sensitive edge	**188**
DBM10	Resistive sensitive edge	**188**
F210	Photocells	**192**
F210B	Photocells	**192**
FA1	Electronic accessory	**191**
FA2	Electronic accessory	**191**
FLO1	Flo - Transmitter	**178**
FLO1R-S	FlorS - Transmitter	**170**
FLO1R-SC	FlorS - Transmitter	**170**
FLO2	Flo - Transmitter	**178**
FLO2R-M	FlorM - Transmitter	**171**
FLO2R-S	FlorS - Transmitter	**170**
FLO2R-SC	FlorS - Transmitter	**170**
FLO4	Flo - Transmitter	**178**
FLO4R-M	FlorM - Transmitter	**171**
FLO4R-S	FlorS - Transmitter	**170**
FLO4R-SC	FlorS - Transmitter	**170**
FLOX1	(Flo) coding - Receiver	**179**
FLOX1R	(Flo) coding - Receiver	**174**
FLOX2	(Flo) coding - Receiver	**179**
FLOX2R	(Flo) coding - Receiver	**174**
FLOXB2	(Flo) coding - Receiver	**179**
FLOXB2R	(Flo) coding - Receiver	**174**
FLOXI	(Flo) coding - Receiver	**179**
FLOXI2	(Flo) coding - Receiver	**179**
FLOXI2R	(Flo) coding - Receiver	**174**
FLOXIR	(Flo) coding - Receiver	**174**
FLOXM	(Flo) coding - Receiver	**179**
FLOXM220	(Flo) coding - Receiver	**179**
FLOXM220R	(Flo) coding - Receiver	**174**
FLOXMR	(Flo) coding - Receiver	**174**
FT210	Optical device	**190**
FT210B	Optical device	**190**
FTA1	Electronic accessory	**191**
FTA2	Electronic accessory	**191**
HKA1	Electronic accessory	**51**
HK7024	Hyke - Motor for swing gates	**50**
HK7224	Hyke - Motor for swing gates	**50**
HSB1	Electronic accessory	**198**
HYKEKCE	Hyke - Kit for swing gates	**52**
HY7005	Hyppo - Motor for swing gates	**54**
HY7024	Hyppo - Motor for swing gates	**54**
HY7100	Hyppo - Motor for 2-leaf folding doors	**134**
HY7124	Hyppo - Motor for 2-leaf folding doors	**134**
HYA11	Mechanical accessory	**135**
HYA12	Mechanical accessory	**55**
HO7124	Hopp - Motor for swing gates	**46**
HO7224	Hopp - Motor for swing gates	**46**
HOPPKCE	HoppKit - Kit for swing gates	**48**
IB	Mechanical accessory	**194**
INB	Control interface	**159**
KA1	Mechanical accessory	**41**
KIO	Selector	**204**
LO5	Rack	**85**
LBAR	L-Bar - Barrier gate	**90**
LBARI	L-Bar - Barrier gate	**90**
LP1	Electronic accessory	**189**
LP2	Electronic accessory	**189**
M3BAR	M-Bar - Barrier gate	**92**
M3BARI	M-Bar - Barrier gate	**92**
M5BAR	M-Bar - Barrier gate	**92**

Code	Product line	Page
M5BARI	M-Bar - Barrier gate	**92**
M7BAR	M-Bar - Barrier gate	**92**
M7BARI	M-Bar - Barrier gate	**92**
MC424L	Moonclever - Control unit	**212**
MC824H	Moonclever - Control unit	**210**
MCA1	Electronic accessory	**211**
MCA2	Electronic accessory	**213**
ME3000	Metroplex - Motor for swing gates	**62**
ME3000L	Metroplex - Motor for swing gates	**62**
ME3010	Metroplex - Motor for swing gates	**62**
ME3024	Metroplex - Motor for swing gates	**62**
MEA1	Mechanical Accessory	**63**
MEA2	Mechanical Accessory	**63**
MEA3	Mechanical Accessory	**63**
MEA5	Mechanical Accessory	**63**
MEA6	Mechanical Accessory	**63**
MECF	Metroplex - Foundation box	**62**
MECX	Metroplex - Foundation box	**62**
ML	Flashing signal light	**202**
ML24	Flashing signal light	**202**
ML24T	Flashing signal light	**202**
MLB	Flashing signal light	**202**
MLBT	Flashing signal light	**202**
MLL	Flashing signal light	**202**
MLT	Flashing signal light	**202**
MOA1	Electronic accessory	**201**
MOA2	Electronic accessory	**201**
MOCA1	Electronic accessory	**201**
MOCARD	Electronic accessory	**199**
MOCARDP	Electronic accessory	**199**
MOCF	Electronic accessory	**191**
MOCF2	Electronic accessory	**191**
MOCS	Electronic accessory	**201**
MOF	Photocells	**195**
MOFB	Photocells	**194**
MOFO	Photocells	**195**
MOFOB	Photocells	**194**
MOM	Proximity reader	**199**
MOMB	Proximity reader	**198**
MORX	Electronic accessory	**199**
MOSA1	Electronic accessory	**200**
MOSE	Selector	**200**
MOSEU	Selector	**200**
MOSI	Selector	**200**
MOSIU	Selector	**200**
MOSU	Selector	**200**
MOT	Selector	**197**
MOTB	Selector	**196**
MOTXR	Selector	**197**
MOTXS	Selector	**197**
MOU	Programming and code control unit	**205**
MXD	Electronic accessory	**175**
MXP	Electronic accessory	**175**
MXT	Electronic accessory	**175**
NKA3	Electronic accessory	**71**
NKSL400	Naked - Motor for sliding gates	**70**

Code	Product line	Page
NSEA	Electronic accessory	**188**
NSEL	Electronic accessory	**188**
NSFB	Instrument for force impact measurement	**188**
NSFS	Instrument for force impact measurement	**188**
NSSWPDA	Software for force impact measurement	**188**
OBOX2	Connection interface	**152**
OBOX2B	Connection interface	**152**
ON1	One - Transmitter	**154**
ON1C	One - Transmitter	**154**
ON1FM	One - Transmitter	**154**
ON2	One - Transmitter	**154**
ON2C	One - Transmitter	**154**
ON2FM	One - Transmitter	**154**
ON4	One - Transmitter	**154**
ON4C	One - Transmitter	**154**
ON4FM	One - Transmitter	**154**
ON9	One - Transmitter	**154**
ON9FM	One - Transmitter	**154**
OTA2	Mechanical accessory	**127**
OTA3	Mechanical accessory	**127**
OTA9	Mechanical accessory	**127**
OTA11	Mechanical accessory	**127**
OTA12	Mechanical accessory	**127**
OVA1	Electronic accessory	**151**
OVA2	Electronic accessory	**151**
OVA3	Electronic accessory	**151**
OVA4	Electronic accessory	**151**
OVBT	Electronic accessory	**150**
OVBTGSM	Electronic accessory	**150**
OVIEW	Electronic accessory	**150**
OX2	One - Receiver	**155**
OX2FM	One - Receiver	**155**
OX2T	One - Receiver	**155**
OX2TFM	One - Receiver	**155**
OX4T	One - Receiver	**156**
OXI	One - Receiver	**155**
OXIFM	One - Receiver	**155**
OXIT	One - Receiver	**155**
OXITFM	One - Receiver	**155**
PCM	Electronic accessory	**201**
PIU	Electronic accessory	**216**
PLA6	Mechanical accessory	**21**
PLA8	Mechanical accessory	**23**
PLA10	Mechanical accessory	**21**
PLA11	Mechanical accessory	**21**
PLA13	Mechanical accessory	**21**
PLA14	Mechanical accessory	**21**
PLA15	Mechanical accessory	**21**
PLANOTIME	Programmable timer	**173**
PO	Electronic accessory	**109**
POA1	Electronic accessory	**41**
POA3	Electronic accessory	**41**
POP7124KCE	PopKit - Kit for swing gates	**44**
POPKCE	PopKit - Kit for swing gates	**42**
PP7024	Pop - Motor for swing gates	**40**
PP7124	Pop - Motor for swing gates	**40**

Nice Alphabetical index

Nice product codes

Code	Product line	Page
PP7224	Pop - Motor for swing gates	**40**
PS124	Electronic accessory	**45**
PS224	Electronic accessory	**91**
PS324	Electronic accessory	**21**
PS424	Electronic accessory	**39**
PSY24	Electronic accessory	**186**
PUL	Electronic accessory	**133**
PW1	Heating device	**204**
RB400	Robus - Motor for sliding gates	**72**
RB400KCE	RobusKit - Kit for sliding gates	**74**
RB600	Robus - Motor for sliding gates	**72**
RB600KCE	RobusKit - Kit for sliding gates	**76**
RB600P	Robus - Motor for sliding gates	**72**
RB1000	Robus - Motor for sliding gates	**72**
RB1000P	Robus - Motor for sliding gates	**72**
RBA1	Electronic accessory	**73**
RBA3	Electronic accessory	**73**
RBA4	Electronic accessory	**79**
RDKCE	RoadKit - Kit for sliding gates	**76**
RN2010	Rondo - Motor for balanced rolling shutters	**136**
RN2020	Rondo - Motor for balanced rolling shutters	**136**
RN2030	Rondo - Motor for balanced rolling shutters	**136**
RN2040	Rondo - Motor for balanced rolling shutters	**136**
RNA01	Electronic accessory	**137**
ROA6	Rack	**71**
ROA7	Rack	**71**
ROA8	Rack	**71**
ROA81	Rack	**81**
RUA1	Electronic accessory	**83**
RUA2	Electronic accessory	**83**
RUA3	Electronic accessory	**83**
RUA12	Mechanical Accessory	**81**
RUN1500	Run - Motor for sliding gates	**80**
RUN1500P	Run - Motor for sliding gates	**80**
RUN1800	Run - Motor for sliding gates	**82**
RUN1800P	Run - Motor for sliding gates	**82**
RUN2500	Run - Motor for sliding gates	**82**
RUN2500I	Run - Motor for sliding gates	**82**
RUN2500P	Run - Motor for sliding gates	**82**
SBAR	S-Bar - Barrier gate	**96**
SBARI	S-Bar - Barrier gate	**96**
SIA1	Mechanical Accessory	**97**
SIA2	Mechanical Accessory	**105**
SIA3	Mechanical Accessory	**104**
SIA20	Electronic accessory	**105**
SIGNO3	Signo - Barrier gate	**102**
SIGNO3I	Signo - Barrier gate	**102**
SIGNO4	Signo - Barrier gate	**102**
SIGNO4I	Signo - Barrier gate	**102**
SIGNO6	Signo - Barrier gate	**102**
SIGNO6I	Signo - Barrier gate	**102**
SM2	Smilo - Transmitter	**176**
SM4	Smilo - Transmitter	**176**
SMX2	Smilo - Receiver	**177**
SMX2R	(Flo) coding - Receiver	**174**
SMXI	(Flo) coding - Receiver	**174**
SMXIS	Smilo - Receiver	**177**
SN6031	Spinbus - Motor for sectional and up-and-over doors	**118**
SN6041	Spinbus - Motor for sectional and up-and-over doors	**118**
SNA1	Electronic accessory	**125**
SNA2	Electronic accessory	**121**
SNA3	Electronic accessory	**117**
SNA4	Electronic accessory	**117**
SNA16	Mechanical accessory	**117**
SNA20	Electronic accessory	**123**
SNA30	Spinbus - Preassembled guide	**118**
SNA31	Spinbus - Extension	**118**
SO2000	Soon - Motor for sectional doors	**130**
SOA2	Electronic accessory	**131**
SPA2	Mechanical accessory	**117**
SPA5	Mechanical accessory	**117**
SPA6	Mechanical accessory	**117**
SPA7	Mechanical accessory	**117**
SPIN10KCE	SpinKit - Kit for sectional and up-and-over doors	**124**
SPIN11KCE	SpinKit - Kit for sectional and up-and-over doors	**124**
SPIN20KCE	SpinbusKit - Kit for sectional and up-and-over doors	**120**
SPIN21KCE	SpinbusKit - Kit for sectional and up-and-over doors	**120**
SPIN22KCE	SpinbusKit - Kit for sectional and up-and-over doors	**120**
SPIN23KCE	SpinbusKit - Kit for sectional and up-and-over doors	**122**
SPIN30	Spinbus - Motor for sectional and up-and-over doors	**116**
SPIN40	Spinbus - Motor for sectional and up-and-over doors	**116**
SU2000	Sumo - Motor for sectional doors	**132**
SU2000V	Sumo - Motor for sectional doors	**132**
SU2000VV	Sumo - Motor for sectional doors	**132**
SU2010	Sumo - Motor for sectional doors	**132**
SYA1	Electronic accessory	**187**
SYKCE	Solemyo - Solar power kit	**186**
SYP	Solemyo - Photovoltaic solar panel	**186**
SYP30	Solemyo - Photovoltaic solar panel	**186**
TCA65	Resistive sensitive edge	**188**
TCB65	Resistive sensitive edge	**188**
TCBS60	Mechanical sensitive edge	**189**
TCE	Resistive sensitive edge	**188**
TCF	Resistive sensitive edge	**188**
TCK	Resistive sensitive edge	**188**
TMF	Electronic accessory	**117**
TN2010	Ten - Motor for up-and-over doors	**126**
TN2010L	Ten - Motor for up-and-over doors	**126**
TN2020	Ten - Motor for up-and-over doors	**126**
TN2020L	Ten - Motor for up-and-over doors	**126**
TN2030	Ten - Motor for up-and-over doors	**126**
TN2030L	Ten - Motor for up-and-over doors	**126**
TNA1	Electronic accessory	**127**
TNA2	Electronic accessory	**127**
TNA4	Mechanical accessory	**127**
TNA5	Mechanical accessory	**127**
TNA6	Mechanical accessory	**127**
TNA8	Mechanical accessory	**127**
TNA9	Electronic accessory	**127**
TNA38	Mechanical accessory	**127**
TNKCE	TenKit - Kit for up-and-over doors	**128**
TNLKCE	TenKit - Kit for up-and-over doors	**128**

Code	Product line	Page
TO4005	Toona - Motor for swing gates	**20**
TO4006	Toona - Motor for swing gates	**20**
TO4015	Toona - Motor for swing gates	**20**
TO4024	Toona - Motor for swing gates	**20**
TO4605	Toona - Motor for swing gates	**20**
TO5015	Toona - Motor for swing gates	**22**
TO5016	Toona - Motor for swing gates	**22**
TO5024	Toona - Motor for swing gates	**22**
TO5024I	Toona - Motor for swing gates	**22**
TO5605	Toona - Motor for swing gates	**22**
TO7024	Toona - Motor for swing gates	**24**
TOONA4024KCE	ToonaKit - Kit for swing gates	**26**
TS	Mechanical accessory	**21**
TT1L	Tag - Control unit	**169**
TT1N	Tag - Control unit	**169**
TT2D	Tag - Control unit	**168**
TT2L	Tag - Control unit	**168**
TT2N	Tag - Control unit	**168**
TTX4	Tag - Transmitter	**167**
TUB3500	Tub - Motor for sliding gates	**84**
TW1	Heating device	**204**
VE	VeryVE - Transmitter	**178**
VR	VeryVR - Transmitter	**172**
WA1	Mechanical accessory	**106**
WA2	Mechanical accessory	**104**
WA3	Mechanical accessory	**104**
WA4	Mechanical accessory	**104**
WA6	Mechanical accessory	**104**
WA7	Mechanical accessory	**104**
WA8	Mechanical accessory	**105**
WA9	Electronic accessory	**105**
WA10	Mechanical accessory	**91**
WA11	Mechanical accessory	**91**
WA12	Mechanical accessory	**91**
WA13	Mechanical accessory	**91**
WA14	Mechanical accessory	**104**
WA15	Mechanical accessory	**106**
WA16	Mechanical accessory	**108**
WA20	Electronic accessory	**109**
WA21	Mechanical accessory	**104**
WA22	Mechanical accessory	**104**
WA24	Mechanical accessory	**104**
WA25	Mechanical accessory	**104**
WALKY1024KCE	WalkyKit - Kit for swing gates	**36**
WALKY2024KCE	WalkyKit - Kit for swing gates	**38**
WAX	NiceWay - Support	**163**
WCF	NiceWay - Support	**165**
WCG	NiceWay - Support	**165**
WCI	NiceWay - Support	**165**
WCO	NiceWay - Support	**165**
WEO	NiceWay - Support	**162**
WET	NiceWay - Support	**162**
WEW	NiceWay - Support	**162**
WIL4	Wil - Barrier gate	**106**
WIL4I	Wil - Barrier gate	**106**
WIL6	Wil - Barrier gate	**106**
WIL6I	Wil - Barrier gate	**106**
WINGO4024KCE	WingoKit - Kit for swing gates	**30**
WINGO5024KCE	WingoKit - Kit for swing gates	**34**
WINGO5KCE	WingoKit - Kit for swing gates	**32**
WINGOKCE	WingoKit - Kit for swing gates	**28**
WLA1	Electronic accessory	**37**
WLT	Multifunction indicator light	**203**
WM001C	NiceWay - Transmitter module	**161**
WM001G	NiceWay - Transmitter module	**161**
WM002G	NiceWay - Transmitter module	**161**
WM003C	NiceWay - Transmitter module	**161**
WM003C1G	NiceWay - Transmitter module	**161**
WM003G	NiceWay - Transmitter module	**161**
WM004G	NiceWay - Transmitter module	**161**
WM006G	NiceWay - Transmitter module	**161**
WM009C	NiceWay - Transmitter module	**161**
WM080G	NiceWay - Transmitter module	**161**
WM240C	NiceWay - Transmitter module	**161**
WRA	NiceWay - Support	**164**
WRB	NiceWay - Support	**164**
WRG	NiceWay - Support	**164**
WRS	NiceWay - Support	**164**
WRT	NiceWay - Support	**164**
WRW	NiceWay - Support	**164**
WSA	NiceWay - Support	**164**
WSB	NiceWay - Support	**164**
WSG	NiceWay - Support	**164**
WSS	NiceWay - Support	**164**
WST	NiceWay - Support	**164**
WSW	NiceWay - Support	**164**
WWW	NiceWay - Support	**163**
XBA2	Electronic accessory	**101**
XBA3	Electronic accessory	**93**
XBA4	Electronic accessory	**101**
XBA5	Mechanical accessory	**91**
XBA6	Electronic accessory	**95**
XBA7	Electronic accessory	**91**
XBA8	Electronic accessory	**91**
XBA9	Mechanical accessory	**91**
XBA10	Mechanical accessory	**94**
XBA11	Mechanical accessory	**94**
XBA13	Mechanical accessory	**91**
XBA14	Mechanical accessory	**91**
XBA15	Mechanical accessory	**91**
XBA16	Mechanical accessory	**94**
XBA17	Mechanical accessory	**91**
XBA18	Electronic accessory	**91**
XBA19	Mechanical accessory	**97**
X-BAR	X-Bar - Barrier gate	**100**
XMBOX	X-Metro - Foundation box	**56**
XME2024	X-Metro - Motor for swing gates	**56**
XME2124	X-Metro - Motor for swing gates	**56**
XMETRO2024KCE	X-MetroKit - Kit for swing gates	**58**
XMETRO2124KCE	X-MetroKit - Kit for swing gates	**60**

Nice

Concept
Wurbs

Product Design
Roberto Gherlenda

Printed by
AGCM

The information shown in this publication
is purely indicative. Nice reserves the right to make
any modifications to the products as it sees fit.

“Nice has suggested a new interpretation of the connection between people and their domestic environment marked by the utmost simplicity, clearness and aesthetic quality. Boring and complicated operations become smooth and amusing and change into activities that satisfy end-users…”

from Il Sole 24 Ore - Speciale Nova,
by Marco Bettiol and Stefano Micelli,
1st February 2007

Nice is “harmonious and innovative design, correct from a functional point of view and easily suitable to different buildings or architectural environments”

from ADI Design Index, 2000

“We believe in the diversity of ideas which give birth to innovation”

Lauro Buoro
Chairman of Nice S.p.A.

Nice SpA
Oderzo TV Italia
Ph. +39.0422.85.38.38
Fax +39.0422.85.35.85
info@niceforyou.com

Find out more about Nice
products and services on the website:
www.niceforyou.com

Nice
Home Automation

CATGEN/GB/00/11-11